SMART Response™ 2014

Interactive response system

User's guide

SMART®

Product registration

If you register your SMART product, we'll notify you of new features and software upgrades.

Register online at smarttech.com/registration.

Keep the following information available in case you need to contact SMART Support.

Serial number: _____

Date of purchase: _____

FCC warning

This equipment has been tested and found to comply with the limits for a Class B digital device, pursuant to part 15 of the FCC Rules. These limits are designed to provide reasonable protection against harmful interference in a residential installation. This equipment generates, uses and can radiate radio frequency energy and, if not installed and used in accordance with the instructions, may cause harmful interference to radio communications. However, there is no guarantee that interference will not occur in a particular installation. If this equipment does cause harmful interference to radio or television reception, which can be determined by turning the equipment off and on, the user is encouraged to try to correct the interference by one or more of the following measures:

- Reorient or relocate the receiving antenna.
- Increase the separation between the equipment and receiver.
- Connect the equipment into an outlet on a circuit different from that to which the receiver is connected.
- Consult the dealer or an experienced radio/TV technician for help.

IC RSS 210 notice

This device complies with Industry Canada licence-exempt RSS standard(s). Operation is subject to the following two conditions: (1) this device may not cause interference, and (2) this device must accept any interference, including interference that may cause undesired operation of the device.

Le présent appareil est conforme aux CNR d'Industrie Canada applicables aux appareils radio exempts de licence. L'exploitation est autorisée aux deux conditions suivantes : (1) l'appareil ne doit pas produire de brouillage, et (2) l'utilisateur de l'appareil doit accepter tout brouillage radioélectrique subi, même si le brouillage est susceptible d'en compromettre le fonctionnement.

Trademark notice

SMART Response, SMART Notebook, SMART Board, SMART Ink, SMART Sync, Senteo, smarttech, the SMART logo and all SMART taglines are trademarks or registered trademarks of SMART Technologies ULC in the U.S. and/or other countries. Microsoft, Windows, Internet Explorer, ActiveX, DirectX, Visual Studio, PowerPoint and Excel are either registered trademarks or trademarks of Microsoft Corporation in the U.S. and/or other countries. Mac, Mac OS, OS X and Safari are trademarks of Apple, Inc., registered in the U.S. and other countries. Adobe, Flash and Reader are either registered trademarks or trademarks of Adobe Systems Incorporated in the U.S. and/or other countries. Intel, Intel Core and Pentium are registered trademarks of Intel Corporation or its subsidiaries in the U.S. and other countries. ExamView is a registered trademark of FSCreations, Inc. All other third-party product and company names may be trademarks of their respective owners.

Copyright notice

© 2014 SMART Technologies ULC. All rights reserved. The use and copying of SMART Response assessment software is subject to a license agreement. Any other use is prohibited. No part of this publication may be reproduced, transmitted, transcribed, stored in a retrieval system or translated into any language in any form by any means without the prior written consent of SMART Technologies ULC. Information in this manual is subject to change without notice and does not represent a commitment on the part of SMART.

This product and/or use thereof covered by one or more of the following U.S. patents.

www.smarttech.com/patents

04/2014

Important information

Safety information i
Compliance ii

Before you use your SMART Response™ interactive response system, please read and understand the safety warnings and precautions described in this guide. These safety warnings and precautions instruct you in the safe and correct operation of the system and its accessories so you can prevent injuries to yourself and others or damage to the equipment. You must always ensure that the SMART Response system is being used correctly.

NOTE

If you own a SMART product other than a SMART Response system, refer to the user's guide that came with your product for relevant warnings and maintenance instructions.

Safety information

WARNING

- Failure to follow the installation instructions that ship with the SMART product could result in personal injury or damage to the product.
- When using your SMART Response system with a SMART Board® interactive whiteboard and projector, do not stare into the beam of light created by the projector. Instruct children not to look in the direction of, or stare at, this beam of light.
- Ensure that any cables extending across the floor to your SMART product are properly bundled and marked to prevent a trip hazard.
- To reduce the risk of fire or electric shock, do not expose the components to rain or moisture.

CAUTION

- Use only the batteries provided or equivalent replacements. Do not attempt to recharge the batteries.

- Do not install batteries with the polarity (+/-) reversed.
- Do not dispose of batteries in a fire or incinerator.

  Dispose of batteries according to the laws and regulations of your region. If you do not know the applicable rules for your region, consult the battery manufacturer.
- Do not use abrasive erasers or harsh chemicals when cleaning SMART Response system hardware.
- Do not open the receiver or clicker units to attempt repairs. Refer all service to authorized SMART service personnel.

IMPORTANT

- You must connect the USB cable that came with your SMART product to a computer that has a USB compliant interface and that bears the USB logo. In addition, the USB source computer must be compliant with CSA/UL/EN 60950 and bear the CE mark and CSA and/or UL Mark(s) for CSA/UL 60950. This is for operating safety and to avoid damage to the SMART product.
- If your SMART product requires replacement parts, make sure the service technician uses replacement parts specified by SMART Technologies or parts with the same characteristics as the original.

Compliance

This device complies with Part 15 of the FCC rules. Operation is subject to the following two conditions:

1. This device may not cause harmful interference, and
2. This device must accept any interference received, including interference that may cause undesired operation.

Changes or modifications to this equipment not expressly approved by SMART Technologies may void the user's authority to operate this equipment.

Contents

Important information ..... **i**

Safety information i

Compliance ii

Chapter 1: About the SMART Response system **1**

Introduction 1

Features 2

Hardware – clickers and receivers 4

Chapter 2: Getting started **5**

Using your SMART Response system 6

Environmental requirements 8

Computer requirements 9

Connecting hardware and activating SMART Response software 10

Activating SMART Response software 14

Selecting how students answer questions 16

Starting SMART Response LE software the first time 19

Asking instant questions 21

Setting up Teacher Tools 22

Creating a class list 28

Editing a class list 35

Chapter 3: Using SMART Response software **39**

About SMART Notebook software 40

Creating assessments 41

Adding questions to the assessment 45

Adding questions using the Insert Question wizard 51

Importing questions from APIP files 54

Importing questions from a Word document 55

Importing questions from an XML or SQZ file 57

Importing questions from a PDF file 58

Importing questions from ExamView HTML 60

Setting answers for imported questions 63

Tagging questions 64

Chapter 4: Starting and connecting to a class **65**

Before class begins 66

Starting a class 67

Connecting to the class 71
Disconnecting students from a class 77
Completing assessments 79

Chapter 5: Using clickers 87

About SMART Response PE clickers 88
About SMART Response LE clickers 95
About SMART Response XE clickers 98
Asking questions 99

Chapter 6: Reviewing, printing and exporting assessment results 101

Importing assessment results 102
Reviewing assessment results 103
Flagging results 106
Generating Student Performance reports 107
Generating Class Performance reports 109
Printing and exporting questions and results 112

Chapter 7: Maintaining your SMART Response system 117

Preventing component damage 118
Changing the clicker batteries 119
Resetting clickers 120
Receiver indicator lights 120
Troubleshooting the receiver 121
Other troubleshooting tips 122
Troubleshooting SMART Response CE connection issues 122

Appendix A: Hardware environmental compliance 125

Waste Electrical and Electronic Equipment Regulations (WEEE directive) 125
Restriction of Certain Hazardous Substances (RoHS directive) 125
Batteries 125
Packaging 126
Covered electronic devices 126
California Air Resources Board – Airborne Toxic Control Measure 126
Restriction of Certain Chemicals (REACH directive) 126

Index 127

Chapter 1

About the SMART Response system

Introduction 1
Integration with SMART Notebook SE (Student Edition) software 1
Features 2
Hardware – clickers and receivers 4

Introduction

The SMART Response interactive response system is an assessment tool that enhances learning. It facilitates summative and formative assessment by enabling you to pose a question before, during or after a lesson to find out whether students are on track. You can use the feedback to help shape the rest of your lesson.

Once you finish the lesson, create a question set with SMART Response assessment software to evaluate learning more formally. You can feel confident that the students have answered the way they intended, because they can verify and change their self-paced responses directly.

Teachers can easily add creativity to questions by combining text with images to make questions more dynamic. The SMART Response system comes with SMART Notebook™ collaborative learning software, and offers 6,000 learning objects that you can add to quizzes.

The SMART Response system also increases one-to-one interaction by enabling teachers to survey and engage students and to collect responses.

Integration with SMART Notebook SE (Student Edition) software

SMART Notebook SE software enables your students to connect to your class, take quizzes and assessments, respond to questions and submit their work. For more information on how students use SMART Notebook SE software with SMART Response CE software, see the SMART Notebook SE software online Help.

Features

Feature	Description
Integration with SMART Notebook software	Open SMART Response software from a tab in SMART Notebook software. With SMART Notebook's Gallery of more than 6,000 items of graphic-rich content, you can add images and other multimedia content to your questions and/or assessments.
SMART Notebook Full Screen mode toolbar	When you put SMART Notebook software in Full Screen mode, SMART Response buttons for creating questions, running assessments and viewing results appear in the toolbar. You can use SMART Notebook software in Full Screen mode to reduce distractions while presenting your lesson.
SMART Notebook Transparent mode toolbar	When you put SMART Notebook software in Transparent mode, SMART Response buttons for creating questions, running assessments and viewing results appear in the toolbar. In Transparent mode you can use other applications and see supporting content while presenting your lesson.
Multiple assessment options	Compile questions for formative and summative assessment, prepare quizzes or exams in advance and ask spontaneous questions to gauge student comprehension at any point during a lesson.
Mobile device support	SMART Response VE cloud-based assessment software enables students to answer questions using an Internet-enabled device, such as a smartphone, laptop or tablet, from anywhere.
Teacher Tools	Access, view and manage all assessment data in one location. This powerful tool enables you to create class lists and manage tests and quizzes.
Question variety	Teachers can ask different types of questions, including true or false, yes or no, multiple choice, multiple answer, numeric fraction or math expression and text answer.
Familiar user interface	SMART Response software's intuitive software lets you create pages that have clear, contextual and concise information for users at any level of experience.
Math expression questions and intelligent grading	When you create an expression question with a correct answer, you can choose which intelligent expression grading option that SMART Response uses to determine which mathematically equivalent answers you want to accept as correct.
Monitoring students during and after the test	You can monitor how much time as elapsed for a quiz. Grades are immediately calculated after the test and displayed in graphical charts and numeric tables.

Feature	Description
Previewing results during an assessment	You can see what responses students have submitted during the assessment and get immediate feedback on how the class is doing.
Easy-to-view results	Display results in easy-to-view pie charts or graphs, which you can then insert on a SMART Notebook page for a closer view and to add your own notes in digital ink. You can also view results in detail, so you can see exactly how each student has answered.
Add or change correct answers to completed assessments	Using Teacher Tools, you can choose to accept a submitted answer as correct in addition to (or instead of) the original correct answer. SMART Response software calculates the students' grades after the changes.
Multiple print options	Print assessments as handouts so students can complete them at their own pace, or add comments to completed assessments that can be printed and used later as study guides.
Anonymous mode	Allows students to respond with complete anonymity. Students can use SMART Response software without signing in, or they can participate in an assessment using any clicker or Internet-enabled device, allowing you to gauge the group's understanding.
Integration with third-party question bank	SMART Response software is compatible with commonly used file formats, so you can easily import questions from other applications, including Microsoft® Word and PowerPoint®, PDFs and third-party question banks.
Integrated Gradebook	Through Teacher Tools Gradebook, you can build comprehensive student progress reports which can be as simple or as detailed as you need. Create high-level comparisons of class performance, specific reports based on tagged characteristics such as demographics or curriculum standards, or personalized reports on how individual students are doing.
Tagging	You can tag students and questions and automatically generate reports with comprehensive student and class performance breakdowns. You can also tag key words to describe various characteristics, correlate questions to standards and break down performance into a printable chart. In addition to creating custom tags, you can select tags from a comprehensive list of educational standards and cognitive level tags for the questions you create in SMART Notebook software. You can also add tags or change the tags to questions after you finish creating an assessment.

Feature	Description
Reporting	In support of the educational standard and cognitive level tagging, 16 report types are available in Teacher Tools that enable teachers to analyze student performance. You can use 10 of these reports to reflect educational standard and/or cognitive level, instead of being limited to analysis by assessment. These reports also enable teachers to compare performance between students and between classes.

Hardware – clickers and receivers

Feature	Description
Radio frequency (RF) technology	RF technology provides a reliable wireless connection between the student clickers and the central receiver. You don't need a line of sight to the clickers, and the clickers and the receiver can connect within a 100' (30 m) range.
Ergonomic design	Designed to fit comfortably in young hands or to lie flat on a desk. Even young students find the durable handheld clickers easy to use and comfortable to hold. Responding to questions is quick and easy.
Language support	Students can switch the PE clicker displays to support English and French languages, or Russian and English, depending on the clicker model. Teachers can switch the LE clicker displays to support English, French, Russian, German, Spanish or Italian.
Ability to input math expressions	XE clickers have dedicated buttons that enable students to enter complex math and science expressions.
Ability to enter symbols and diacritics	In XE mode, you can enter common math and science symbols. You can also enter diacritics (letters with special symbols or accents).
LCD screen	The easy-to-read LCD screen has room to display several lines of text. Students can see whether responses have been sent, and they can review the status of their clicker's battery power and network connection.
Descriptive icons	Icons on the LCD screen enable students to monitor the battery power and the network status of their clicker.
Extended battery life	Each clicker uses long-lasting AA or AAA batteries.
Easy connection	The receiver connects to a computer using a USB cable, and it doesn't require an additional power adapter.
Multiple receiver support	Users can use multiple SMART Response receivers from one teacher computer enabling the support of larger classrooms and audiences.
Flexible installation	Receivers weigh just under 6 oz. (165 g) and easily mount onto walls, desks or tables.

Chapter 2
Getting started

Using your SMART Response system 6
- Teacher Tools 7
- SMART Response system hardware 7
- Using the interactive response system 7

Environmental requirements 8
- Temperature 8
- Humidity 8
- Water and fluid resistance 8
- Dust and scratching 8
- Electrostatic discharge (ESD) 8
- Conducted and radiated emissions 8

Computer requirements 9
- Windows operating systems 9
- Mac OS X operating system software 9

Connecting hardware and activating SMART Response software 10
- Connecting receivers 10
  - Recommended height for mounting receivers 11
- Extending the USB cable 12
- Checking receiver status 13
- Checking clicker status 13

Activating SMART Response software 14
- Activating SMART Response CE software 14
- Activating SMART Response VE software 15

Selecting how students answer questions 16
- SMART Response VE Advanced Settings 18
- Multiple devices mode limitations 18
  - Why don't I use Multiple devices mode all the time? 18

Starting SMART Response LE software the first time 19
- Pairing student clickers 20
- Assigning clicker IDs 20

Asking instant questions 21

Setting up Teacher Tools 22
- Starting Teacher Tools 23

Starting Teacher Tools in CE mode using SMART Sync Class List Server 23
Creating a SMART Teacher file 23
Editing your SMART Teacher file 24
Adjusting privacy and alert options 25
Using Privacy mode 25
Changing alerts 25
Applying encryption methods 26
Configuring service ports 27
Creating a class list 28
Creating a class list in Teacher Tools 28
Importing a class list from Excel 29
Creating class lists for all modes except LE 29
Creating class lists for LE mode 30
Importing the class list 31
Importing a class list from a CSV file 32
Creating class lists for all modes except LE 32
Creating class lists for LE mode 32
CSV file formatting 33
Tips for formatting CSV files for importing class lists 33
Using SMART Sync Class List Server class lists 34
Editing a class list 35
Editing student information 35
Adding students to a class list 35
Removing students from a class list 36
Tagging students 37
Changing a class's passing grade 37

Using your SMART Response system

Using the SMART Response interactive response system, you can perform planned or spontaneous student assessments in the same software you use to deliver your lessons—it integrates seamlessly with SMART Notebook collaborative learning software.

You can easily prepare exams in advance or spontaneously quiz students during a lesson and receive immediate responses from your class. Depending on the mode you're using, SMART Response software supports several different types of questions, including true or false, yes or no, multiple choice, multiple answer, text answers, and numerical fractions and expressions. You can import questions from third-party question banks, applications and other common programs.

After students submit their answers, you can see the results by percentage in a graphical format, which gives an accurate representation of the whole class's performance, not just that of individual students.

Teacher Tools

Using Teacher Tools, you can access, view and manage all assessment data in one location. You can create class lists and set up, conduct and manage tests and quizzes. You can track each student's progress over several assessments, and you can even tag questions with key words to evaluate test results and student performance in greater detail.

Teacher Tools makes it easy for you to keep everything organized. The easy-to-use management tool automatically files test results in the built-in gradebook. It also lets you manage your class lists and view performance reports and test scores.

The Teacher Tools Gradebook gives you quick access to test results, making it easy to prepare reports and conduct evaluations. Reports can be as simple or as detailed as you need. Create high-level comparisons of class performance, specific reports based on tagged characteristics such as demographics or curriculum standards, or personalized reports on how individual students perform. You can also create reports that show grades for the entire school year.

SMART Response system hardware

The SMART Response receiver and clickers use radio frequency technology to provide a reliable wireless connection between the student clickers and the central receiver. You don't need a line of sight to the clickers, and the range is 100' (30 m). The receiver verifies receipt of every signal and messages automatically re-send if they aren't received.

Students find the handheld clickers easy to use and comfortable to hold. Students can easily read several lines of text on the large display screen. They can see if responses have been sent and can review the status of their clicker's battery power and network connection.

Using the interactive response system

You can purchase SMART Response interactive response system software for both Windows® and Mac computers that meet the minimum requirements. See *Computer requirements* on page 9 for information.

You can use SMART Response software's integrated SMART Notebook features on any computer, so you can take your laptop home to develop assessment questions without having to connect a receiver. You can then copy the assessment files to a classroom computer where you can run your assessments.

When you install SMART Response software, by default, the installation program installs SMART Notebook software and SMART Product Drivers. When you select SMART Response software, the installer includes Teacher Tools and menus that appear in the SMART Notebook software toolbar. If you are using SMART Response software in CE or VE mode, you must activate the software within 30 days of installation.

Environmental requirements

Before installing or using your SMART Response interactive response system, review the following environmental requirements and compliance statements.

Temperature

SMART Response components can operate in the temperature range of 41°F to 95°F (5°C to 35°C). In addition, the product can withstand storage temperatures from -40°F to 120°F (-40°C to 50°C).

Humidity

SMART Response components can operate in up to 80% relative humidity, non-condensing.

Water and fluid resistance

SMART Response components are for indoor use only and don't meet any salt-spray or water-ingress requirements. Don't pour or spray any liquids directly onto SMART Response components. These liquids can get into areas where they can damage sensitive electronic components.

Dust and scratching

SMART Response components are for use in office and classroom environments, and they aren't for industrial use where heavy dust and pollutants can cause malfunctions or impaired operation. They're designed for pollution degree 1 (P1) as per EN61558-1, which is defined as "No pollution or only dry non-conductive pollution."

Electrostatic discharge (ESD)

SMART Response components meet the requirements of EN61000-4-2 severity level 4 for direct and indirect ESD. No malfunction or damage up to 15 kV (both polarities) with a 330 ohm, 150 pF probe (air discharge). Unmated connectors meet 8 kV for direct (contact) discharge.

Conducted and radiated emissions

SMART Response hardware's narrowband radiated electric field meets the limits for Class B performance, as defined in EN55022/CISPR 22.

Computer requirements

Windows operating systems

- Pentium® 4 or better processor
- 2 GB of RAM
- 2.5 GB of free hard disk space (an additional 600 MB is required for complete Gallery installation)
- Windows 7 SP1, Windows 8 and Windows 8.1 or later operating system
- Microsoft®.NET Framework 4 Client Profile for SMART Notebook software and SMART Ink™
- Microsoft Visual Studio® 2010 Tools for Office for SMART Ink
- Adobe Flash Player 12 ActiveX® control for SMART Notebook software
- Adobe®Flash® Player 12 Firefox® plug-in for SMART Notebook software and SMART Response software
- Adobe Reader® 9.5 or later
- Microsoft DirectX® technology 9 or later for SMART Notebook software
- DirectX 9 compatible graphics hardware for SMART Notebook software
- Internet Explorer® Internet browser 8 or later
- Internet access to download SMART software

NOTE

If you don't have the Microsoft .NET Framework 4 Client Profile, the Adobe Flash Player 12 ActiveX control or the Adobe Flash Player 12 Firefox plug-in, the installation wizard installs these components.

Mac OS X operating system software

- Intel® Core™ 2 Duo or later processor
- 2 GB of RAM
- 2 GB of free hard disk space (an additional 600 MB is required for complete Gallery installation)
- Mac OS X 10.7, Mac OS X 10.8 and Mac OS X 10.9
- Adobe Flash Player 12 or later plug-in for SMART Notebook software and SMART Response software
- Adobe Reader 10.1.4 or later

- Safari application program 5.1 or later
- Internet access to download SMART software

NOTES

- 1 MB = 1024^2 bytes, 1 GB = 1024^3 bytes.
- SMART Response software runs on 32-bit and 64-bit operating systems.
- Operating systems and other third-party software released after this SMART software might not be supported.

Connecting hardware and activating SMART Response software

To send information to and receive information from SMART Response clickers, you must connect the SMART Response receiver to your computer. You can then check the receiver's status in Teacher Tools.

IMPORTANT

If you are using SMART Response software in CE or VE mode, you must activate the software within 30 days of installation. See *Activating SMART Response CE software* on page 14 or *Activating SMART Response VE software* on page 15 for instructions.

Connecting receivers

SMART Response receivers support up to 100 clickers each. You can connect more than one receiver to your computer to support larger classes.

IMPORTANT

- Do not connect the receiver to your computer until after you install SMART Response software.
- For operating safety and to prevent damage to the receiver, connect its USB connector only to a computer that has a USB compliant interface and that bears the USB logo. In addition, the USB source computer must be compliant with CSA/UL/EN 60950 and bear the CE mark and CSA and/or UL mark(s) for CSA/UL 60950.
- The receiver has a USB 2.0 full-speed peripheral interface that runs at speeds of up to 12 Mbps. The unit works with USB 2.0- and USB 1.1-compliant USB interfaces.

Recommended height for mounting receivers

Unlike infrared devices, SMART Response receivers don't require an unobstructed line-of-sight transmission path. You can operate SMART Response over longer distances if you minimize interference, signal reflections and the number and size of objects between the receiver and the clickers.

Choose a location for the receiver that's as high as possible and in plain view of the students' clickers. For permanent installations, use a USB extender to mount the receiver high on a wall. To minimize interference from other radio-frequency equipment, position the receiver away from other wireless products, such as 2.4 GHz routers and cordless telephones.

WARNING

To prevent product damage or personal injury, route the USB cable where it will not be stepped on or tripped over.

To connect the receiver

1. Position the receiver in an unobstructed location away from other wireless products, such as 2.4 GHz routers and cordless telephones.
   - For temporary installations, place the receiver on top of your desk.
   - For permanent installations, mount the receiver on a wall or on the front of a piece of furniture using two screws (not provided).

   Orient the receiver with the long side or edge facing the class as shown.

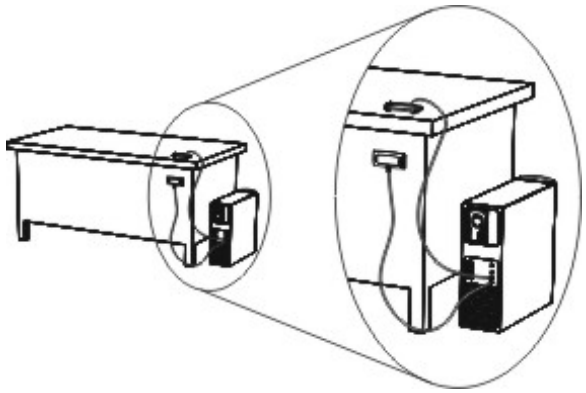

2. Insert the receiver's captive USB cable connector into an available USB receptacle on your computer.

   The Ready light on the receiver turns on to indicate that the receiver is receiving power.

   NOTE

   After you connect a receiver, if a message appears asking you to restart your computer, restart your computer.

   On Windows computers, the first time you connect the receiver, a balloon message appears from the notification area indicating that new hardware has been detected.

   IMPORTANT

   If the balloon message indicates that Windows is starting to try to locate a driver from the Microsoft website, stop the search. If Windows does not find the driver on your computer, you did not install SMART Response software. Install the software and repeat the above procedure.

3. See *Checking receiver status* on the next page to verify that the receiver is working properly.

Extending the USB cable

If the provided 6' (1.8 m) USB cable attached to the receiver isn't long enough, use active USB extender cables, USB extenders or hubs.

This graphic shows the SMART active USB extension cable (Part No. USB-XT).

In some cases, you can use up to four cables to extend the length to about 80' (25 m), which is the limit of the USB specification. Passive USB extension cables aren't supported.

Alternatively, USB extenders that use Cat 5 cabling can extend the range to approximately 325' (100 m) at a much higher cost. The more economical SMART CAT 5 USB extender (Part No. CAT5-XT-1100) can extend the USB connection up to 130' (40 m) using an RJ45 Cat 5 cable.

Impedance mismatches and poor connections can cause signal degradation and performance problems.

NOTE

Some computers use internal active hubs to provide more USB receptacles. These internal hubs can limit the number of USB extenders you can use and the length of the Cat 5 cable you can use.

Checking receiver status

If you connected the receiver, you're ready to start a class session. You can check the receiver's communication status at any time using the following procedure.

To check the receiver's status

1. Click the **SMART Response** icon in the Windows notification area or Mac menu bar.

   A message appears below the *Configure Devices* heading indicating how many receivers are connected.

2. Click the icon below the *Configure Devices* heading.

   Teacher Tools starts.

   The *Devices* window appears showing a status message.

3. If a "Your SMART Response receiver is connected and working" message appears, the SMART Response receiver is connected and communicating with the SMART Response software. The receiver name appears below the *Devices* button.

   Click **My Receiver** to display the classroom name and the make, model and hardware ID (MAC address) of the receiver. If you have more than one receiver, *My Receiver* appears once for each receiver connected.

   OR

   If a "Your SMART Response receiver is not connected" message appears, the SMART Response receiver isn't connected or isn't working properly. The receiver name doesn't appear below the *Devices* button.

   Check the receiver connections or repeat the receiver installation. See *Connecting receivers* on page 10.

Checking clicker status

You can check the status of each clicker in your classroom and, if you have more than one receiver, determine which receiver the clicker is connected through.

To check clicker status

1. Click the **SMART Response** icon in the Windows notification area or Mac menu bar.

   A message appears below the *Configure Devices* heading indicating how many receivers are connected.

2. Click the icon below the *Configure Devices* heading.

   Teacher Tools starts.

   The *Devices* window appears showing a status message.

   If a “Your SMART Response receiver is not connected” message appears, the SMART Response receiver isn’t connected or isn’t working properly. The receiver name doesn’t appear below the *Devices* button. See *Checking receiver status* on the previous page to troubleshoot the receiver connection.

3. Click **My Receiver** to display the classroom name and the make, model and hardware ID (MAC address) of the receiver. If you have more than one receiver, *My Receiver* appears once for each receiver connected.

4. Select the **Clickers** tab.

   A list of clickers connected through the receiver appears. Each row in the list displays the student name, the clicker’s hardware ID or MAC address, the battery capacity and the signal strength.

Activating SMART Response software

If you are using SMART Response software in CE or VE mode, you must activate the software within 30 days of installation.

- If you are using SMART Response software in CE mode, see *Activating SMART Response CE software* below.
- If you are using SMART Response software in VE mode, see *Activating SMART Response VE software* on the next page.

Activating SMART Response CE software

You must activate SMART Response CE software within 30 days of installation. After you install the software, use the following procedure to activate it.

To activate SMART Response CE software

1. Click the **SMART Response** icon in the Windows notification area or Mac menu bar, and then select **Check for Updates and Activation**.

   The *SMART Product Update* dialog box appears and displays the time remaining in your software’s evaluation period.

> **NOTE**
>
> If your SMART Response software is already activated, the *Status (Days Left)* column shows *Activated* beside SMART Response.

2. Click **Activate**.
3. Type your product key in the text box, select the **I accept** check box, and then click **Next**.

> **NOTE**
>
> If you don't have a software license, contact your authorized local reseller through smarttech.com/where.

Activating SMART Response VE software

You must activate SMART Response VE software within 30 days of installation.

To activate SMART Response VE software

1. Click the **SMART Response** icon in the Windows notification area or Mac menu bar, and then select **Check for Updates and Activation**.

   The *SMART Product Update* dialog box appears and displays the time remaining in your software's evaluation period.

   > **NOTE**
   >
   > If your SMART Response software is already activated, the *Status (Days Left)* column shows *Activated* beside SMART Response.

2. Click **Activate**.
3. Type your product key in the text box, select the **I accept** check box, and then click **Next**.

   > **NOTE**
   >
   > If you don't have a software license, contact your authorized local reseller through smarttech.com/where.

Selecting how students answer questions

Students can answer questions using one of these options:

- SMART Response / Senteo clickers
- SMART Response PE clickers
- SMART Response LE clickers
- SMART Response XE clickers
- SMART Notebook SE software on student devices
- SMART Response VE using Internet-enabled devices
- Multiple devices, optionally including SMART Response VE and SMART Response / Senteo or SMART Response LE devices

Each of these options has a corresponding mode in SMART Response software. The first time you plug in a SMART receiver, prompts you to select the operating mode. Subsequently, you can select the appropriate mode for the devices in your classroom using the SMART Response Setup Tool.

NOTES

- If you have more than one type of SMART Response device in your classroom, you can choose Multiple devices mode, or you can choose the mode that matches the type of device you're using, and then use only that type of device while in that mode.
- Some question types aren't available in all modes. See *About question types* on page 45 for more information.
- Students can use SMART Response PE, SMART Response LE, or SMART Response XE clickers, SMART Response SE (SMART Response CE) or Internet enabled devices (SMART Response VE) while is in Multiple devices mode, but there are some limitations. See *Multiple devices mode limitations* on page 18 for more information.

To open the SMART Response Setup Tool on a Windows computer

1. Close software and Teacher Tools if they're running.
2. Click the **SMART Response** icon in the Windows notification area, and then select **Setup Tool**.

   The *SMART Response Setup Tool* window opens.

To open the SMART Response Setup Tool on a Mac computer

1. Close software and Teacher Tools if they're running.
2. Click the **SMART Response** icon in the Mac menu bar, and then select **Setup Tool**.

   The *SMART Response Setup Tool* window opens.

To select how students answer questions

1. Open the **SMART Response Setup Tool**.
2. Select from the following options:
   - SMART Response LE
   - SMART Response XE
   - SMART Response VE
   - SMART Response PE
   - SMART Response / Senteo
   - SMART Notebook SE software
   - Multiple devices
     - Include SMART Response VE
     - Include SMART Response / Senteo, SMART Response LE or both types

   NOTES

   - Classes that are running stop automatically.
   - If you select SMART Response / Senteo or LE in Multiple devices mode, Text answer questions aren't available.
   - If you select SMART Response VE or Multiple devices and have selected the **Include SMART Response VE** option, you can select a SMART Response VE Local server. See *SMART Response VE Advanced Settings* on the next page for more information.

3. Click **OK**.

   A message appears stating that your setup has changed. If you switch to VE or if you select the **Include SMART Response VE** option in Multiple devices mode, a message appears asking you to accept the terms of use. Click **I Accept**.

   When you start software, your students can answer questions using the device or devices you selected in step 2.

SMART Response VE Advanced Settings

The first time you select SMART Response VE using the SMART Response Setup Tool (see *Selecting how students answer questions* on page 16 for more information). SMART Response software uses the default **response.smarttech.com** server hosted by SMART Technologies. If you want to use a SMART Response VE Local server, perform the following procedure.

To select a SMART Response VE Local server

1. Select **SMART Response VE** or select **Multiple devices** and select the **Include SMART Response VE** option in the procedure in *Selecting how students answer questions* on page 16.
2. Click the **Advanced** button at the bottom of the dialog box.

   The *Advanced Settings* dialog box appears.
3. Select **SMART Response VE Local server**.

   The *Website* text box appears.
4. Type the URL of the SMART Response VE Local server you want to use.
5. If you want to test the server connection, click **Test Connection**.

   If a green check mark and *Working* appear, the connection is working.

   If you have incorrectly typed the URL, or if a network problem is preventing the connection, a *SMART Response VE Connection Errors* dialog box appears. Verify the URL or contact your system administrator.

Multiple devices mode limitations

In addition to using any available clickers, students can use software (SMART Response CE) or Internet enabled devices (SMART Response VE) while is in Multiple devices mode. This can be particularly useful if you have a variety of devices in your class.

IMPORTANT

You must be licensed to use all the devices you want to use in Multiple devices mode. See *Activating SMART Response software* on page 14.

Why don't I use Multiple devices mode all the time?

When in Multiple devices mode, SMART Response features are limited to those that all modes share.

The following are examples of limitations when in Multiple devices mode:

- Students are unable to answer XE math expression questions.
- If you select the LE option when you select Multiple devices mode, all clicker users must use the Clicker ID to sign in.
- Students can answer only the first question of an assessment when they use LE clickers.
- Students are unable to answer text questions, multiple answer or mathematics questions when they use LE clickers.

Starting SMART Response LE software the first time

You can use SMART Response LE in two modes: Anonymous mode and Sign-In mode. See *About Sign In and Anonymous modes* on page 67 for information about the operating modes.

Before you can use SMART Response LE in your classroom in Anonymous mode, you must

- assign a classroom name to the receiver, which you can do by creating a .teacher file, or by starting an assessment in SMART Notebook software.
- pair the students' clickers with the SMART Response receiver.

To use SMART Response LE in Sign-In mode, in addition to the above, you must

- assign clicker IDs to each student's clicker (which you can do when you pair the clickers with the receiver).
- create a class with a class list containing the clicker IDs.

NOTES

- You're unable to assign a classroom name while you install SMART Response software. You can create a classroom name only after the software is installed and Teacher Tools starts for the first time.
- If you created a .teacher file on another computer, you can copy it to your computer and open it instead of creating a new file.

Pairing student clickers

IMPORTANT

You must connect the receiver and start a class before you can pair the clickers with the receiver.

To pair clickers with the SMART Response receiver

1. If a class isn't running, start **Teacher Tools**. See *Starting Teacher Tools* on page 23.

   Teacher Tools appears.

2. Select **Anonymous Mode**, and then click **Start Class**.

   The receiver's Power light flashes and then turns solid green. The receiver's Transmit light flashes green.

3. Press the clicker's **Power** and **Menu** buttons simultaneously for two seconds.

   Teacher Mode appears on the screen.

4. Using the clicker's **Up** and **Down** buttons, select **Scan & Pick**, and then press **Enter**.

   The clicker searches for available classrooms.

5. Use the clicker's **Up** and **Down** buttons to select your class from the list, and then press **Enter**.

   If your connection is successful, a "Paired With RCV" message appears.

6. Use the **Up** and **Down** buttons to select **Exit**, or hold down the clicker's **Power** button to turn off the clicker.

7. Repeat steps 3 through 6 for the rest of your clickers.

You're now ready to start a class and ask questions in Anonymous mode. See *Asking instant questions* on the next page to ask single questions, or see *Adding questions using the Insert Question wizard* on page 51 to create assessments.

Assigning clicker IDs

Before your students can connect and use their clickers, you must program each student's clicker with a unique clicker ID number. When your students connect to a class, SMART Response software checks their clicker IDs against the class list to determine whether they are valid members of the class.

If their clicker IDs aren't in the class list, the clickers don't connect.

To program clicker IDs into the clickers

1. If the clicker is turned on, press the clicker's **Power** button to turn it off.

2. Press the clicker's **Power** and **Menu** buttons simultaneously.

   Teacher Mode appears on the clicker's screen.

3. Use the **Up** and **Down** buttons to scroll to **Clicker ID**, and then press **Enter**.

4. Use the **Up** and **Down** buttons to select a unique number between 1 and 199, and then press the **Menu** button.

   IMPORTANT

   Each clicker's ID must be unique and must correspond to the student's clicker ID in your class list. See *Creating a class list* on page 28 for information.

5. Use the **Up** and **Down** buttons to scroll to **Exit**, and then press **Enter**.

   The clicker starts and is ready to use.

6. Repeat steps 1 to 5 for every clicker in your class.

Asking instant questions

Use the Instant Question feature to introduce the SMART Response interactive response system to your students. Instant questions are individual questions you ask spontaneously—they aren't part of an assessment. When you use the Instant Questions feature, you're unable to type a question or assign a correct answer.

You can ask an instant question verbally, write it or type it on an interactive whiteboard and add objects directly onto the SMART Notebook page.

NOTE

Ensure that you start your class and that all students are connected before you ask an instant question.

To ask individual questions using the Instant Question feature

1. Click the **SMART Response** icon in the Windows notification area or Mac menu bar, and then select **Open Notebook Software**.

   A blank SMART Notebook page appears.

2. Click the **SMART Response** icon on the toolbar.

   The *Insert Question* and *Start Question* icons appear on the toolbar.

3. Click the **Insert Question** icon.

4. Click one of the **Instant Question** buttons.

   The *Instant Question* dialog box appears asking whether you want to insert the question on this page or on a new page.

5. Select one of the options.

   TIP

   If you want to use the same option by default, select the **Always perform this action** option. You can change the default in the *Preferences* menu.

   A SMART Notebook page appears showing the possible answers to the question. The *Response* tab changes to *Single Question*, and the *Progress* button is selected.

   The question starts automatically and appears on the student's display.

   NOTE

   If you haven't started a class, a message appears asking you to select a class. Select a class, and then click **Start Class**.

6. Present your question to the class.
7. After all students answer the question, click **Stop this question**.
8. To save the results, click **Save**.

   To add another question without clearing the results of the previous question, don't click **Clear**, and then repeat steps 2 to 6.

Setting up Teacher Tools

With Teacher Tools, you can

- check the status and performance of the receivers, clickers and students.
- select Sign In mode or Anonymous mode.
- manage class lists.
- start classes so that students can sign in.

When you open Teacher Tools for the first time, you create a SMART Teacher file. You can later edit the SMART Teacher file and adjust the privacy options.

Starting Teacher Tools

When you start Teacher Tools for the first time, it opens to the *Welcome to Teacher Tools* view where you can create a SMART Teacher file, manage class lists, generate Class or Student Performance reports and perform many other tasks.

If this is the first time you're starting SMART Response software in LE mode, see *Starting SMART Response LE software the first time* on page 19 for information.

To start Teacher Tools

Click the **SMART Response** icon in the Windows notification area or Mac menu bar, and then select the icon below the *Teacher Tools* heading.

Teacher Tools appears in *Gradebook* view.

> **NOTE**
>
> If SMART Notebook software is open, you can also start Teacher Tools by selecting **Response > Teacher Tools**.

Starting Teacher Tools in CE mode using SMART Sync Class List Server
When SMART Response software is in CE mode (using SMART Notebook SE software) and connected to a SMART Sync™ Class List Server, and you start Teacher Tools, a *Welcome* dialog box appears. You can select one of the teacher names in the dialog box to load the Administered Teacher's class information into Teacher Tools. See *Using SMART Sync Class List Server class lists* on page 34 for more information.

Creating a SMART Teacher file

If you want to save all of your class lists and assessment results, you need to create a SMART Teacher file. Your SMART Teacher file also enables your students to find and connect to your classes when they connect in Sign In mode.

If you need to, you can create additional SMART Teacher files after you create the initial one.

To create a SMART Teacher file the first time you use SMART Response software

1. Click the **SMART Response** icon in the Windows notification area or Mac menu bar, and then select the icon below the *Teacher Tools* heading.

   The *Welcome to Teacher Tools* wizard appears.

   > **NOTE**
   >
   > The wizard appears only if you haven't created a SMART Teacher file.

2. Type a classroom name of one to eight characters, and then click **Begin**.

   An *Anonymous Mode* window appears showing the classroom name.

   > **NOTE**
   >
   > If a receiver isn't connected, a *SMART Response isn't ready* window appears. If you have a receiver, connect it now.

3. Click **Create a new SMART Teacher file and set up your class lists**.

   A *Gradebook Information* window appears.

4. Type your name and other information in the text boxes. The *Save* button is unavailable until you provide all the required information.

5. Click **Save**.

   A *Save As* dialog box appears.

6. Type a file name, and then click **Save**.

   The .teacher file saves and the *Gradebook* window appears displaying the teacher's name.

To create an additional SMART Teacher file

1. Start **Teacher Tools**. See *Starting Teacher Tools* on the previous page.

   Teacher Tools appears.

2. Select **File > New**.

   The *Gradebook Information* screen appears.

3. Type your information in the text boxes, and then click **Save**.

4. Browse to where you want to save your SMART Teacher file, and then click **Save**.

Editing your SMART Teacher file

The first time you started SMART Response Teacher Tools, you created a SMART Teacher file to let your students find and connect to your class. See *Creating a SMART Teacher file* on the previous page.

You can use the following steps to change the information in your SMART Teacher file.

To edit your SMART Teacher file

1. Start **Teacher Tools**. See *Starting Teacher Tools* on the previous page.

   Teacher Tools appears.

   NOTE

   You're unable to edit your classroom name if a class is running.

2. Click **Edit** beside the Gradebook name.

   The *Edit Gradebook Information* window appears.

3. Edit the information, and then click **Done**.

Adjusting privacy and alert options

You can set the level of student information that appears on your display and define whether you want student sign-in and sign-out alerts to appear.

Using Privacy mode

By default, SMART Response software displays student information such as ID numbers and grades. If you don't want to display sensitive information in front of your class you can turn Privacy mode on.

To hide private information

Click the **Privacy: Off** button in the upper right corner of the screen.

To display private information

Click the **Privacy: On** button in the upper-right corner of the screen.

Changing alerts

You can set SMART Response software to display an alert message on your screen when students sign in or out.

NOTE

Alerts appear only when the SMART Response Desktop menu is running.

To set sign-in and sign-out alerts

1. Start **Teacher Tools**. See *Starting Teacher Tools* on page 23.

   Teacher Tools appears.

2. Select **Edit > Preferences** (Windows computers) or **Teacher Tools > Preferences** (Mac computers) from the menu bar.

   The *SMART Response Preferences* dialog box appears.

3. Click the **Alerts** tab.

4. Select or clear the check boxes for the alerts you want to display or hide, and then click **OK**.

Applying encryption methods

You can set SMART Response CE software to use SSL or Diffie-Hellman encryption. SSL encryption allows other programs to access SMART Response CE software. Diffie-Hellman encryption (the default method) doesn't allow other programs to access SMART Response CE software.

NOTES

- The system administrator can override this setting.
- You must put SMART Response software in SMART Notebook SE software mode or Multiple devices mode to configure the encryption method.

To apply an encryption method

1. Start **Teacher Tools**. See *Starting Teacher Tools* on page 23.

   Teacher Tools appears.

2. Select **Edit > Preferences** (Windows computers) or **Teacher Tools > Preferences** (Mac computers) from the menu bar.

   The *SMART Response Preferences* dialog box appears.

3. Click the **Encryption** tab.
4. Select **Diffie Hellman** or **SSL Digital Certificate** from the *Method* drop-down list.

   If you selected *SSL Digital Certificate*, additional options appear:

   - Select **Automatically generated certificate** if you want SMART Response CE software to generate and use a security certificate.
   - Select **Imported certificate**, and then browse to and select the certificate you want to import, to use an existing certificate.

5. Click **OK**.

Configuring service ports

You can specify which ports SMART Notebook SE software uses for the file data channel and encrypted data channel, or you can set the software to use random ports. Use the following procedures to configure SMART Response CE software to use the same port configuration.

IMPORTANT

You must put SMART Response software in SMART Notebook SE software mode or Multiple SMART Response devices mode to configure the service ports.

To specify the service ports

1. Start **Teacher Tools**. See *Starting Teacher Tools* on page 23

   Teacher Tools appears.

2. Select **Edit > Preferences** (Windows computers) or **Teacher Tools > Preferences** (Mac computers) from the menu bar.

   The *SMART Response Preferences* dialog box appears.

3. Click the **Networking** tab.
4. Clear the **Randomize** check boxes beside the *Encrypted data channel* and *File data channel* boxes if they're selected, and then type the port numbers you want to use.
5. Click **OK**.

To use random service ports

1. Start **Teacher Tools**. See *Starting Teacher Tools* on page 23

   Teacher Tools appears.

2. Select **Edit > Preferences** (Windows computers) or **Teacher Tools > Preferences** (Mac computers) from the menu bar.

   The *SMART Response Preferences* dialog box appears.

3. Click the **Networking** tab.
4. Select the **Randomize** check box beside the *Encrypted data channel* or *File data channel* boxes.
5. Click **OK**.

Creating a class list

Before you can start a class in Sign In mode, you must have a class list. You can use Teacher Tools to create a list, or you can import one from a Microsoft Excel® or comma separated values (CSV) file.

NOTE

You don't need to create a class list if you're starting the class in Anonymous mode. For more information, see *About Sign In and Anonymous modes* on page 67.

Creating a class list in Teacher Tools

To create a class list

1. Start **Teacher Tools**. See *Starting Teacher Tools* on page 23.

   Teacher Tools appears.

2. Click **Add a Class** in the *Gradebook* area on the left.
3. Type a name for your class (for example, Math), add any optional details in the *Class Information* boxes, and then click **Add**.

   After a short delay, the new class's window appears and the class name appears in the *Gradebook* area.
4. Click the **Students** tab at the top of the window.
5. Click **Add** on the toolbar.

   The *Properties* window appears below the table.
6. If you are using SMART Response LE clickers, type a unique number between 1 and 199 in the *Clicker ID* box.

   NOTE

   The clicker IDs in the class list must correspond with the IDs programmed into the student clickers.
7. Type a unique 1 to 15 digit ID in the *Student ID* box.

   NOTES

   - If you're using SMART Response PE, LE or XE clickers, the student ID must be a maximum of 15 digits or students can't sign in to the class.
   - If you're using SMART Response in VE mode, the student ID can contain numbers and letters from the Roman alphabet.
8. Type a student's name in the *Name* boxes. The student's e-mail address and tags are optional. You can also type name and ID information directly in the table.

   NOTE

   You can use tags to categorize the students in custom groupings that SMART Response software uses when you create student reports.

   The student information saves to the class list as you type it.
9. Repeat these steps for each student.

Importing a class list from Excel

IMPORTANT

This feature is supported by SMART Response software for Windows operating systems only.

If you use Microsoft Excel to maintain class lists, you can import an .xls or .xlsx file into Teacher Tools to create a SMART Response class list. You might find it easier to copy the list of names in your current Excel document into a new spreadsheet.

Creating class lists for all modes except LE

Use the following procedure to create class lists for classes that don't use LE clickers.

To create a class list in an Excel spreadsheet

1. Open the Excel spreadsheet that contains your students' names.
2. Insert a blank row at the top of the spreadsheet if it doesn't already have one.
3. Type **ID Number** in the first cell (A1).
4. Type **First Name** in the first cell of the second column (B1).
5. Type **Last Name** in the first cell of the third column (C1).
6. Move the first and last names into the columns directly below the headings.
7. In column A, type a unique 1 to 15 digit ID number for each student.

EXAMPLE

	A	B	C
1	ID Number	First Name	Last name
2	1234	David	Jones
3	6789	Jane	Doe
4	5678	John	Swartz
5	3456	Mary	Smith

8. Save the spreadsheet.

Creating class lists for LE mode

Use the following procedure to create class lists for classes that use LE clickers.

To create a class list in an Excel spreadsheet

1. Open the Excel spreadsheet that contains your students' names.
2. Insert a blank row at the top of the spreadsheet if it doesn't already have one.
3. Type **ID Number** in the first cell (A1).
4. Type **Clicker ID** in the first cell of the second column (B1).
5. Type **First Name** in the first cell of the third column (C1).
6. Type **Last Name** in the first cell of the fourth column (D1).
7. Move the first and last names into the columns directly below the headings.
8. In column A, type a unique 1 to 15 digit ID number for each student.
9. In column B, type a unique clicker ID from 1 to 199 for each student's clicker.

EXAMPLE

	A	B	C	D
1	ID Number	Clicker ID	First Name	Last name
2	12345	1	David	Jones
3	67890	2	Jane	Doe
4	56789	3	John	Swartz
5	34567	4	Mary	Smith

NOTES

- The clicker ID must match the ID programmed into the student's clicker. See *Assigning clicker IDs* on page 20.
- If you don't include a *Clicker ID* column in the spreadsheet, SMART Response software inserts sequential Clicker IDs into the class list. You must then match the clicker IDs to the clickers either by editing the class list or by re-programming the clickers.

10. Save the spreadsheet.

Importing the class list

To import a class list from an Excel spreadsheet

1. Start **Teacher Tools**. See *Starting Teacher Tools* on page 23.

   Teacher Tools appears.

2. Click **Add a Class** in the *Gradebook* area on the left.
3. Type a name for your class, add any optional details to the *Class Information* boxes, and then click **Add**.

   After a short delay, the new class's window appears, and the class name appears in the *Gradebook* area.
4. Click the **Students** tab at the top of the window.
5. Click the **Import** button at the top of the window, and then select **Students**.

   The *Import* dialog box appears.
6. Select the class you want to import the student list into, and then click **Next**.
7. Select **Microsoft Excel** from the *Import from* list, and then click **Next**.
8. Browse to and select the .xls or .xlsx file containing the class list, and then click **Open**.

   After a short delay, the names and IDs from the spreadsheet appear in the *Students* page. You can now edit each student's properties, as required.

Importing a class list from a CSV file

If you use a database or spreadsheet program to maintain class lists, you may be able to export class lists as comma separated values (CSV) files. Refer to your database or spreadsheet program's Help or user's guide for more information.

Creating class lists for all modes except LE

Use the following procedure to create class lists for classes that don't use LE clickers.

To create a class list in CSV format

After exporting your class list as a CSV file, format your file in a text editor so that the first three values are **ID Number**, **First Name** and **Last Name** as shown below.

EXAMPLE

```
ID Number,First Name,Last Name,
12345,John,Doe,
54321,Jane,Doe,
56789,Bob,Jones,
98765,Barb,White
```

For more information, see *CSV file formatting* on the next page.

Creating class lists for LE mode

Use the following procedure to create class lists for classes that use LE clickers.

To create a class list in CSV format

After exporting your class list as a CSV file, format your file in a text editor so that the first four values are **ID Number**, **Clicker ID**, **First Name** and **Last Name** as shown below.

EXAMPLE

```
ID Number,Clicker ID,First Name,Last Name,
12345,1,John,Doe,
54321,2,Jane,Doe,
56789,3,Bob,Jones,
98765,4,Barb,White
```

For more information, see *CSV file formatting* below.

To import a class list from a CSV file

1. Start **Teacher Tools**. See *Starting Teacher Tools* on page 23.

   Teacher Tools appears.

2. Click **Add a Class** in the *Gradebook* area on the left.
3. Type a name for your class, add any optional details to the *Class Information* boxes, and then click **Add**.

   After a short delay, the new class's window appears, and the class name appears in the *Gradebook* area.

4. Click the **Students** tab at the top of the window.
5. Click the **Import** button at the top of the window, and then select **Students**.

   The *Import* dialog box appears.

6. Select the class you want to import the student list into, and then click **Next**.
7. Select **Comma Separated Values (CSV)** from the *Import from* list, and then click **Next**.
8. Browse to and select the CSV file containing the class list, and then click **Open**.

   After a short delay, the names and IDs from your CSV file appear in the *Students* page. You can now edit each student's properties, as required.

CSV file formatting

Tips for formatting CSV files for importing class lists
The following is the general format you should use for CSV files:

The order of the columns isn't important, but the first row must contain the column headings identifying what's in each column.

- You must have a column with the heading **ID Number**.
  - You must put a single space between **ID** and **Number**.
  - In place of ID Number, you can use **ID**, **Student ID** or **Number**.
  - If you don't use a correct column name for the **ID Number**, the software is unable to import the list.
- Specify student first and last names in separate columns.
  - For the student's given name, use **First Name** for the column heading.
  - For the student's family name, use **Last Name** for the column heading.
  - You must put a single space between **First** (or **Last**) and **Name**.
  - In place of First Name, you can use **Given Name**.
  - In place of Last Name you can use **Last**, **Family Name** or **Surname**.
- You can also use the heading **Full Name** to import a single value that combines the first and last names.
  - You must put a single space between **Full** and **Name**.
  - In place of Full Name, you can use **Full** or **Name**.
  - If you use **Full Name**, the software checks to see whether the first and last names are separated by a comma (Last, First). If there isn't a comma, it separates the names with a space (First Last).
  - If you put three or more names with spaces between them, the software uses the last word as the last name and joins all of the first words to form the first name. For example, "Michael John Smith" is split with the last name as Smith, and the first name as Michael John.

NOTE

If your spreadsheet or database software automatically inserts quotation marks around the comma separated values, the software ignores them and the import works properly.

Using SMART Sync Class List Server class lists

When you use SMART Response software in CE mode, you can use class list information from a SMART Sync Class List Server instead of using a class list you created using Teacher Tools. Teachers using SMART Sync can create class list information and store it on their SMART Sync Class List Server. When you start SMART Response Teacher Tools, you can then select which teacher's class information to use for your class.

Alternatively, teachers using SMART Sync software can start a SMART Response class using their class information.

Editing a class list

After you create a class list, you can use Teacher Tools to edit it.

NOTES

- You're unable to edit a class list or remove students from it if a class is running. However, you can add students and import class lists after a class has started.
- When you use SMART Response in CE mode while connected to a SMART Sync Class List Server, you can't make changes to the class list information stored on the server.

Editing student information

NOTE

You're unable to edit student information if a class is running.

To edit student information

1. Start **Teacher Tools**. See *Starting Teacher Tools* on page 23.

   Teacher Tools appears.
2. Select the class from the *Gradebook* area on the left.
3. Click the **Students** tab.

   The class list appears.
4. Select the student whose information you want to edit.

   The *Properties* tab appears below the class list.
5. Type the changes into the *Properties* boxes.
6. Repeat steps 4 and 5 for each student.

Adding students to a class list

To add a student to a class list

1. Start **Teacher Tools**. See *Starting Teacher Tools* on page 23.

   Teacher Tools appears.
2. Select the class from the *Gradebook* area on the left.

3. Click the **Students** tab.

   The class list appears.

4. Click **Add** on the toolbar.

   The *Properties* tab appears below the class list.

5. Type a unique number of 1 to 15 digits in the *Student ID* box.

   NOTES

   - If you are using SMART Response in CE mode, you can use up to 40 alphanumeric characters in the *Student ID* box.
   - If you are using SMART Response in VE mode, the student ID can be up to 8 characters and contain numbers and letters.

   The student information saves to the class list as you type it.

6. Type a student's name in the *Name* boxes. The student's e-mail address and tags are optional. You can also type name and ID information directly in the table.

   TIP

   You can use tags to categorize the students in custom groupings that SMART Response software uses when you create student reports. See *Tagging students* on the next page.

7. Repeat steps 4 to 6 for each student.

Removing students from a class list

NOTE

You're unable to remove students from a class list if a class is running.

To remove a student from a class list

1. Start **Teacher Tools**. See *Starting Teacher Tools* on page 23.

   Teacher Tools appears.

2. Select the class from the *Gradebook* area on the left.

3. Click the **Students** tab.

   The class list appears.

4. Select the student you want to remove, and then click **Delete** on the toolbar.

   A message appears asking you to confirm the deletion.

5. Click **Yes**.

Tagging students

You can use tags to identify groups or categories of students. SMART Response software uses the tags to sort student results when you generate Class Performance reports. For example, if you assign the tags “Senior” and “Junior” to the students, SMART Response software adds a chart to the report, with one bar for each of the two tags.

You can assign multiple tags to a student by separating the tags with a semicolon (;), for example “Senior;Honors” and “Junior;Honors”. In this case, SMART Response software adds a chart to the report, with three bars (one each for “Senior”, “Junior” and “Honors”).

You can also create tag subcategories by separating the tags with a colon (:). An example would be “Gender:Male” and “Gender:Female”. In this case, SMART Response software generates a single report section for “Gender” showing data grouped in “Male” and “Female” subcategories.

Changing a class’s passing grade

When you create a class list, you define the passing grade for the class. You can change that grade later if you want.

To change a class’s passing grade

1. Start **Teacher Tools**. See *Starting Teacher Tools* on page 23.

   Teacher Tools appears.

2. Select the class from the *Gradebook* area on the left.
3. Click **Edit** beside the class name.

   The *Edit Class Information* window appears.

4. Edit the **Passing Grade** value, and then click **Done**.

Chapter 3

Using SMART Response software

About SMART Notebook software 40
- SMART Notebook with SMART Response software 40
- Setting SMART Response preferences in SMART Notebook software 40

Creating assessments 41
- Creating an assessment 41
- Adding content pages to the assessment 43
- Defining feedback options 43

Adding questions to the assessment 45
- About question types 45
- About intelligent expression grading 47
- Creating answer keys 50

Adding questions using the Insert Question wizard 51
- Assigning tags to new questions 52
- Creating custom tags 53

Importing questions from APIP files 54

Importing questions from a Word document 55
- Example Word document question formats 56

Importing questions from an XML or SQZ file 57

Importing questions from a PDF file 58
- PDF document formatting 59

Importing questions from ExamView HTML 60
- About ExamView HTML question importing 61
- Exporting ExamView tests 62

Setting answers for imported questions 63
- Adding choices to a question 63

Tagging questions 64
- Assigning tags to questions 64

About SMART Notebook software

Use SMART Notebook collaborative learning software to save notes written on a SMART interactive product or at your computer as a series of pages. You can use SMART Notebook software to create a presentation full of colorful clip art, graphics, text and Adobe Flash Player compatible files. Then you can present that SMART Notebook file, keeping your audience's attention as you move and interact with these objects. When your audience provides comments and suggestions, write their input on a page using the pen tray tools or the pen buttons in SMART Notebook software.

Because SMART Notebook software works on many platforms, you can share files created on a Windows computer with people who use a Mac computer. You can also export your SMART Notebook file as a cross-platform HTML or PDF file, or as a series of image files.

SMART Notebook with SMART Response software

The integration of SMART Response software with SMART Notebook software means that you can create question sets, import questions from Microsoft Word or XML files and start and stop question sessions directly from SMART Notebook software. You can export the class's and individual students' results to a Microsoft Excel file or an HTML page. Using SMART Response software's printing feature, create handout materials, copies of the questions and graded results pages for each student and for the class. This section introduces the SMART Response software features in SMART Notebook software. For more information about using other SMART Notebook features, refer to SMART Notebook's online Help or the SMART website.

Setting SMART Response preferences in SMART Notebook software

You can customize the default behavior of some of SMART Notebook software's SMART Response features.

To define how SMART Response software inserts instant questions

1. Select **Response > Preferences** from the *SMART Notebook* menu bar.
2. If you want the *Insert Question* button to insert the question on a SMART Notebook page that already has notes or images on it, select **Insert on the current page when possible**.

   If you want to create a new page containing your question, select **Always insert on a new page**.

   If you want SMART Response software to ask you each time, select **Always ask before inserting** (default setting).

To define the Response tab options

1. Select **Response > Preferences** from the *SMART Notebook* menu bar.
2. Select **Pie Chart** or **Bar Chart** In the *Default chart type for tab results* drop-down list to define the type of results chart you want to display by default.
3. If you want to display the *Response* tab immediately after you start an assessment so you can immediately monitor the progress of the assessment, select **Show the Response tab when you start an assessment**.

   If you want to display the *Response* tab immediately after you stop an assessment so you can immediately display the assessment results, select **Show the Response tab when you stop an assessment**.

Creating assessments

You can use SMART Notebook software to create assessments.

Creating an assessment

By creating assessments, you can collect results for each question and for the entire assessment at the same time. You can define feedback options that show whether students answered correctly, what the correct answer was and how the class performed on the question or the entire assessment.

You can install SMART Response software on any computer to create question sets that you can later copy to and run on the computer system in your classroom.

NOTE

You're unable to run assessment files on a computer with standard SMART Notebook software installed. You must have SMART Notebook software that includes SMART Response software.

To create an assessment

1. Click the **SMART Response** icon in the Windows notification area or Mac menu bar, and then select **Open Notebook Software**.

   A blank SMART Notebook page appears.

2. Click the **Response** tab.

> **TIP**
>
> On Windows computers, you can clear the **Auto-hide** option to keep the options visible while you work on your assessment.

3. Click **Title Page**.

   The *Insert Title Page* dialog box appears.

4. In the top text box, type a title for your assessment.
5. Select the type of assessment you want to create, and then click **Add**. Optionally, you can type Subject and Topic information.

   Title page information appears on the SMART Notebook page, and the *Response* tab displays several options that enable you to customize your assessment.

To edit the assessment title page and description

1. On the SMART Notebook page, double-click the title, grade, subject or date text to change its properties or edit the text.
2. Click the **Response** tab.
3. In the *Description* area, edit the options you defined when you created the assessment.

> **NOTE**
>
> If you edit the SMART Notebook page, the *Description* information doesn't change. Similarly, if you edit the *Description* information, the SMART Notebook page doesn't change.

To add question and content pages to your assessment

See *Adding questions to the assessment* on page 45 and *Adding content pages to the assessment* on the next page.

To save your assessment

1. Click **Save** .

   A *Save As* dialog box appears.

2. Browse to a folder, type a file name, and then click **Save**.

Adding content pages to the assessment

You can add content pages anywhere in your assessment to introduce questions or provide background information.

To add a content page

1. Create your assessment. See *Creating an assessment* on page 41 for more information.
2. Click the **Page Sorter** tab, and then select the page you want to insert a content page after.
3. Click the **Response** tab.
4. Click the **Next Steps** tab.
5. Click **Make the next page a content page**.

   A blank page appears.
6. Use SMART Notebook's tools to add text, images or Adobe Flash Player compatible files from the Gallery.

Defining feedback options

Feedback options allow you to show your students their individual grades, the correct answers and the class average.

NOTE

The feedback options available vary depending on the SMART Response mode.

Feedback option	Description
After you stop collecting responses	The students can see how they answered and see their grades after you click **Stop**. If you select this option, you can also choose to show the correct answers with grades and show class average.
After all questions are answered	The students can see how they answered and see their grades after they finish answering all questions. If you select this option, you can also choose to show the correct answers with grades and show the class average.
After each question is answered	The students can see how they answered each question and see their grades after they finish answering all questions. If you select this option, you can also choose to show the correct answers with grades and show class average.

Feedback option	Description
Don’t show students their grades	The students can’t see how they answered or their grades.
Don’t allow students to save assessment	Students using SMART Notebook SE software can’t save the assessment to their binders after they finish.

To define feedback options

1. Create your assessment. See *Creating an assessment* on page 41 for more information.
2. On the *Response* tab for the assessment’s title page, select one of the options described in the previous table from the *Show results to students* drop-down list.

Adding questions to the assessment

SMART Response supports up to seven question types depending on the device students use to answer questions.

You can add questions to the assessment using the Insert Question wizard or by importing questions from a Microsoft Word document, XML file, SQZ file, PDF file (Mac only) or ExamView® HTML file.

After you create a question, you can add choices to it or tag it.

About question types

Using SMART Response software, you can ask the following types of questions either individually or as question sets. You can also add notes to any question type that appears when you print the question results.

NOTES

- Opinion questions don't have a correct answer and aren't worth points.
- If you include a question of a type that isn't supported in the SMART Response mode you're using, the question appears with an *Unsupported Question Type* icon in the *Page Sorter* tab in SMART Notebook software.

Question type	Description	Students can answer with						
		Std.	PE	LE	NBSE	XE	VE	Multi
Yes or no	Students use the **Y** (green on LE clickers) or **N** (red on LE clickers) button to answer a question. You can also choose the **Opinion** option to allow either answer.	✓	✓	✓	✓	✓	✓	✓
True or false	Students use the **True** (green on LE clickers) or **False** (red on LE clickers) button to answer a question. You can also choose the **Opinion** option to allow either answer.	✓	✓	✓	✓	✓	✓	✓

Question type	Description	Students can answer with						
		Std.	PE	LE	NBSE	XE	VE	Multi
Multiple choice	Students use a single button, **A** through **J**, to answer the question. Select from 2 to 10 answers (2 to 5 answers for LE clickers) for a question. You can also choose the **Opinion** option to allow any answer. **NOTE** Select this question type to create a question with a Likert scale.	✓	✓	✓	✓	✓	✓	✓
Multiple answer	Students use the **A** through **J** buttons to select the correct combination of answers to the question. Select from 2 to 10 answers for the question. You can also choose the **Opinion** option to allow any combination of answers.	✓	✓		✓	✓	✓	✓
Number, fraction or decimal	Students use the number buttons to answer questions with numeric answers using whole numbers, fractions or decimals. You can also choose the **Opinion** option to allow any answer.	✓	✓		✓	✓	✓	✓
Text answer	Students type the answer to the question. There is a 20-character limit on answers to text answer questions. You can also choose the **Opinion** option to allow any answer. Students using XE clickers or Internet-enabled devices (in VE mode) can type up to 250 characters when answering Opinion questions.		✓		✓	✓	✓	✓ [1]

[1] Text answers aren't supported in Multiple SMART Response devices mode if you select the **Include SMART Response / Senteo, SMART Response LE or both types** option. See *Selecting how students answer questions* on page 16.

Question type	Description	Students can answer with						
		Std.	PE	LE	NBSE	XE	VE	Multi
Number, fraction or expression	Students use math symbols and numeric values to answer the question. There is a 30-character limit on expression answers.					✓		

About intelligent expression grading

When you create an expression question and correct answer, intelligent expression grading accepts multiple representations of that answer expression as correct.

A student's answer is always graded correct if it:

- matches the question's correct answer exactly.
- has a different representation, but is mathematically equivalent and uses the same terms and operators in the same order as the question's correct answer.

You can use intelligent grading options to decide which other mathematically equivalent answers to accept as correct. The following graphic shows the three levels of equivalency that you can define for your questions.

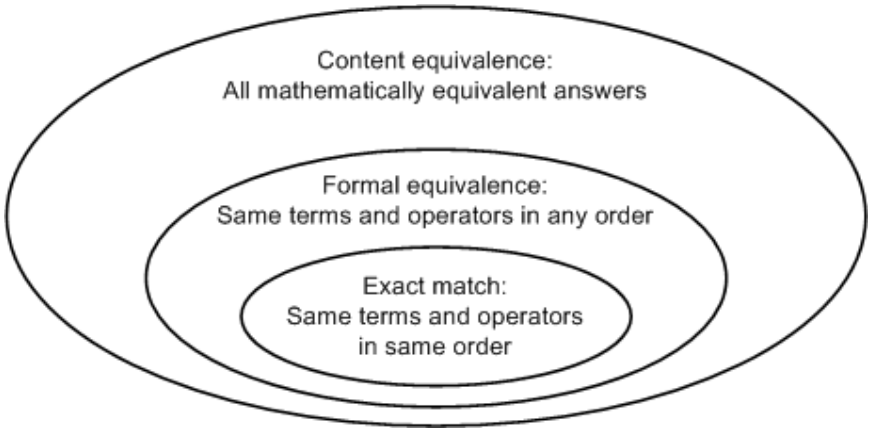

The following table shows examples of how SMART Response software's intelligent expression grading compares expression answers to the question's correct expression answer.

Teacher's correct answer	$3x$	$\frac{x-1}{3}$	x^2	$\sqrt{x}$	3.0×10^2
Exact match	$3(x)$ $3*x$ $3\times x$	$(x-1)/3$ $(x-1)\div 3$			$3.0*10^2$ $(3.0)(10^2)$
Formal equivalent	$x3$ $x\times 3$	$\frac{-1+x}{3}$ $(-1+x)/3$			3.0×10^2 3.00×10^2
Content equivalent	$(-3)(-x)$ $3x+1-1$	$\frac{x}{3}-\frac{1}{3}$	$x\times x$	$x^{.05}$ $x^{1/2}$	$3.0\times10\times10$ 300

The following table shows examples of how student answers would be graded depending on which equivalency option you chose.

Teacher's correct answer	Student's answer	Exact match	Formal equivalent	Content equivalent
$(x-1)(x+3)$	$(x-1)*(x+3)$	☑	☑	☑
	$(x-1)\times(x+3)$	☑	☑	☑
	$(x+3)(x-1)$	☒	☑	☑
	$(x-1)(3+x)$	☒	☑	☑
	x^2+2x-3	☒	☒	☑
5.0×10^2	$5.0*10^2$	☑	☑	☑
	5.00×10^2	☒	☑	☑
	5×10^2	☒	☑	☑
	0.5×10^3	☒	☒	☑
	500	☒	☒	☑
$\frac{-b\pm\sqrt{b^2-4ac}}{2a}$	$(-b\pm\sqrt{b^2-4ac})/(2a)$	☑	☑	☑
	$(-b\pm\sqrt{b^2-4ac})\div(2a)$	☑	☑	☑
	$\frac{-b\pm\sqrt{-4ac+b^2}}{2a}$	☒	☑	☑
	$\frac{\pm\sqrt{-4ac+b^2}-b}{2a}$	☒	☑	☑
	$\frac{-b}{2a}\pm\frac{\sqrt{b^2-4ac}}{2a}$	☒	☒	☑

Creating answer keys

If you already have a quiz or assessment in another format, such as in a hardcopy format, or in a multimedia file, you can create an answer key for that assessment to record the assessment's progress and student's grades. You can then use SMART Response tools to generate, export and print assessment and student reports.

When you create an answer key you create a SMART Notebook file containing a series of SMART Response question pages showing possible answers to your assessment questions but without question content. When you start your assessment, students can use SMART Response devices to answer the questions at their own pace.

NOTE

The question options available when you create your answer key change depending on SMART Response operating mode you are using. See *Selecting how students answer questions* on page 16.

To create an answer key

1. Click **Response > Create Answer Key**.

   The *Create Answer Key* dialog box appears.

2. Type a title in the **Title** box.
3. Select an option from the **Type** drop down list.
4. Select the thumbnail for the type of question you want.

   The correct answer options available depend on the question type you select.

5. Select or type the correct answer, or the **Opinion** option for this question.
6. Adjust the points value and create tags for this question, if required.
7. If you selected *Multiple answer*, *Text* or *Number, fraction, expression* questions in step 4, click **Add**.

   The *Questions* table updates showing your selection.

8. Repeat steps 4 through 7 for each question.
9. Click **Create**.

   SMART Notebook software adds pages for each question, preceded by a title page.

10. Click **File > Save As**, type a file name, and then click **Save**.

You can now start the assessment, and ask the students to respond to the questions. Refer to *Starting and connecting to a class* on page 65 for information. You can edit your answer key using the same procedures found in *Adding questions to the assessment* on page 45.

Adding questions using the Insert Question wizard

With SMART Notebook software, you can ask your students questions and collect their answers. Using the *Insert Question* wizard, you can select tags from a comprehensive list of Educational Standards and Cognitive Level tags for the questions you create in SMART Notebook software or you can create custom tags. You can also add or change the tags to questions after you finish creating an assessment. See *Tagging questions* on page 64.

To add a question using the Insert Question wizard

1. Click the **SMART Response** icon in the Windows notification area or Mac menu bar, and then select **Open Notebook Software**.

   A blank SMART Notebook page appears.

2. Click **Insert Question** on the toolbar.

   The *Insert Question* wizard appears.

3. Click the thumbnail of the question type you want to add, and then click **Next**.

4. Type the question in the text box.

5. If you want to use tags to create categories in your reports, go to the *Assigning tags to new questions* on the next page.

6. Click **Next**.

7. For yes or no and true or false questions, select the correct answer or the **Opinion** option.

   For number, fraction or decimal questions, type the correct answer or select the **Opinion** option.

   For multiple choice or multiple answer questions, select the number of answers, type the answers in the text boxes, click **Next**, and then select the correct answers or the **Opinion** option.

   For text answer questions, type one to four acceptable answers or select the **Opinion** option. See Note 1 below.

   For number, fraction or expression questions, use the expression editor to create the expression question, and then use the editor to create a correct expression answer. See Note 2 below.

8. Type the number of points the student receives for a correct answer.

   TIP

   The value can be a whole or decimal number.

9. If you want to create more questions, click **Insert Another**, and then repeat steps 2 to 7.
10. Click **Finish**.
11. Optionally, use SMART Notebook's tools to add images or Adobe Flash Player compatible files from the Gallery.

NOTES

- Text answer questions are case-sensitive. You can enter up to four answers to support different capitalizations (for example, "iron", "Iron" and "IRON").
- SMART Response XE software's intelligent expression grading feature compares the student responses to the correct expression answer to determine whether it is equivalent based on the **Intelligent Grading** settings you define. See *About intelligent expression grading* on page 47 for more information.

Assigning tags to new questions

To assign tags to new questions

1. Complete the first five steps of the *Adding questions using the Insert Question wizard* on the previous page.
2. Click **Browse**.
3. If you want to choose from a large selection of Educational Standards or Cognitive Level tags, select your region, grade and subject, and then select one or more tags from the categories listed.

   If you want to select your custom tags, select one or more tags below the **Custom Tags** category.

   If you want to create custom tags see the *Creating custom tags* on the next page.

   The selected tags appear in the *Tags for this question* field.
4. Click **Finish**.
5. Go back to step 6 of the *Adding questions using the Insert Question wizard* on the previous page.

Creating custom tags

You can use custom tags to identify your own groups or categories of questions. SMART Response software uses the tags to sort responses to questions when you generate Student Performance and Class Performance reports.

For example, if you assign the tags “Difficult” and “Easy” to questions, SMART Response software creates a chart in the report for questions with “Difficult” and “Easy” tags.

To create custom tags

1. Right-click **Custom Tags**, select **Create Custom Tag**, and then edit the *New Tag* label.

   The new tag appears below *Custom Tags*.

2. Repeat to create all the custom tags you need for your assessment, and then click **Finish**.

Importing questions from APIP files

You can import assessment questions in Accessible Portable Item Protocol (APIP) file format. The APIP file format uses standardized XML that makes it easier to transfer content. You can also export questions in APIP file format (see *Exporting results* on page 113).

IMPORTANT

APIP files are imported as zip files. Do not extract the files before you import them.

NOTE

You can import different types of questions, including yes or no, true or false, multiple choice, multiple answer, numerical fractions and expressions and text answer.

To import questions from APIP

1. Click the **SMART Response** icon in the Windows notification area or Mac menu bar, and then select **Open Notebook Software**.

   A blank SMART Notebook page appears.

2. Select **Response > Import questions from a file**.

   The *Import Questions* dialog box appears.

3. Select **APIP > Next**.

   The *Open* dialog box appears.

4. Browse to and select the zipped APIP file, and then click **Open**.

   A progress bar appears and closes when the conversion is complete.

5. In the *Page Sorter* tab, select the thumbnail for the title page.

6. Optionally, edit and customize the title page and description.

7. In the *Page Sorter* tab, select the thumbnail for the first question page and check it carefully to verify that the conversion process was successful.

8. Repeat step 7 for all questions in the assessment.

After you import the questions, see *Setting answers for imported questions* on page 63.

Importing questions from a Word document

IMPORTANT

This feature is supported on SMART Response for Windows computers only.

When you import questions from a Microsoft Word document, SMART Response software's conversion utility uses a variety of techniques to identify which paragraphs are questions, which paragraphs are possible answers and what type of question to create from the given information. Its most basic technique is to interpret the numbering of the paragraphs. The software also searches for key words when parsing the paragraphs. The software then converts the paragraphs into SMART Notebook assessment pages. See *Example Word document question formats* on the next page for more information.

NOTE

SMART Response software is unable to provide the correct answers to imported questions.

To import questions from a Word document

1. Click the **SMART Response** icon in the Windows notification area, and then select **Open Notebook Software**.

   A blank SMART Notebook page appears.

2. Select **Response > Import Question From > Microsoft Word**.

   The *Open* dialog box appears.

3. Browse to and select the Word document, and then click **Open**.

   A progress bar appears and closes when the conversion is complete.

4. In the *Page Sorter* tab, select the thumbnail for the title page.

5. Optionally, edit and customize the title page and description.

6. In the *Page Sorter* tab, select the thumbnail for the first question page and check it carefully to verify that the conversion process was successful.

7. Repeat step 6 for all questions in the assessment.

After you import the questions, see *Setting answers for imported questions* on page 63.

Example Word document question formats

The following list of questions is an example of how to format your Word document before you import it into SMART Response software.

NOTE

Some SMART Response modes don't support all of the following example question types. See *Selecting how students answer questions* on page 16 for more information.

1. According to the U.S. Census Bureau, the majority of poor children live in:

   a. urban areas

   b. suburban areas

   c. rural areas

2. Can you fill a 10 L aquarium with five 2 L pitchers of water?

   Yes

   No

3. True or false: Half of all even whole numbers are divisible by 4.

   True

   False

4. Let x = 3. Compute y from the equation below.

   y = 20 - 4x

   Answer: _____

5. Which Native American group lived in the highlighted area on the map?

   a. Kwakiutl

   b. Sioux

   c. Iroquois

NOTE

Ensure that you format the questions in your Word document like the ones in these examples before you import the file. In most cases, the import utility ignores headers and footers in the Word document.

Importing questions from an XML or SQZ file

SMART Response software includes an import feature for converting questions from ExamView format XML files or SMART Sync software SQZ files into question sets. SMART Response software uses the tags in the XML and SQZ files to extract questions, answers and correct responses, and then converts the information into assessment pages.

IMPORTANT

You must have or create an ExamView formatted XML text file or a SMART Sync software SQZ file before you can perform this procedure. Binary ExamView formatted files are not supported.

To import questions from an XML or SQZ file

1. Click the **SMART Response** icon in the Windows notification area or Mac menu bar, and then select **Open Notebook Software**.

   A blank SMART Notebook page appears.

2. Select **Response > Import Question From > XML**.

   The *Open* dialog box appears.

3. Browse to and select an XML or SQZ file, and then click **Open**.

   A progress bar appears, followed by the title page for the new question set.

4. In the *Page Sorter* tab, select the thumbnail for the first question page.

5. Add a title page to the assessment, and then customize the page and description as desired.

6. Edit and customize the first question page as desired.

   Check the question carefully, including the correct answer (see below), to verify that the conversion process was successful.

7. Repeat step 6 for all questions in the set.

8. Click **Save**.

   A *Save As* dialog box appears.

9. Browse to a folder, type a name for the file, and then click **Save**.

After you import the questions, see *Setting answers for imported questions* on page 63

Importing questions from a PDF file

IMPORTANT

This feature is available only with SMART Response for Mac computers.

When you import questions from a PDF file, the SMART Response conversion utility interprets the numbering of the paragraphs. The software also recognizes key words when parsing the paragraphs. The software then converts the paragraphs into SMART Notebook assessment pages.

IMPORTANT

Ensure that you format the questions in your PDF file like the ones in *PDF document formatting* on the next page before you begin this procedure.

To import questions from a PDF file

1. Click the **SMART Response** icon in the Mac menu bar, and then select **Open Notebook Software**.

   A blank SMART Notebook page appears.

2. Select **Response > Import Question From > PDF File**.

   The *Open* dialog box appears.

3. Browse to and select the PDF file, and then click **Open**.

   A progress bar appears and closes when the conversion is complete.

4. In the *Page Sorter* tab, select the thumbnail of the title page.
5. Edit and customize the title page and description.
6. Edit and customize the first question page.
7. Check the question carefully to verify that the conversion process was successful.
8. Repeat steps 6 and 7 for all questions in the assessment.

After you import the questions, see *Setting answers for imported questions* on page 63

PDF document formatting

The text below shows examples of multiple choice questions formatted so that SMART Response software can easily convert them to question pages.

1. How is the boy involved in the dog's care?
    a. He feeds the dog twice a day.
    b. He walks the dog once a day.
    c. He cleans up the dog's messes.
    d. He gives the dog a lot of affection.
2. What percentage of the U.S. Government budget goes to welfare and Social Security?
    a. 25% to welfare and 25% to Social Security
    b. less than 1% to welfare and 20% to Social Security
    c. 20% to welfare and 1% to Social Security
    d. less than 1% to welfare and less than 1% to Social Security

NOTES

- You can import only multiple choice questions.
- Remove headers and footers from your PDF file because the import utility will attempt to convert them into questions.
- Introduction, background or source information not related to questions should be on separate pages.
- Text and graphics that the import utility can't convert into questions are imported to a SMART Notebook page as a graphic.

Importing questions from ExamView HTML

You can import ExamView 5.2.0 and 6.2.1 HTML question files into a SMART Response assessment. See *Exporting ExamView tests* on page 62 for information about exporting HTML question files from ExamView.

NOTE

SMART Response is unable to identify the correct answers to imported questions. You must set the correct answers after you import the questions. See *Setting answers for imported questions* on page 63.

To import questions from an ExamView HTML file

1. Click the **SMART Response** icon in the Windows notification area or Mac menu bar, and then select **Open Notebook Software**.

   A blank SMART Notebook page appears.

2. Select **Response > Import Question From > ExamView HTML**.

   The *Open* dialog box appears.

3. Browse to and select the HTML file, and then click **Open**.

   A progress bar appears and closes when the conversion is complete.

4. In the *Page Sorter* tab, select the thumbnail for the title page.

5. Optionally, edit and customize the title page and description.

6. In the *Page Sorter* tab, select the thumbnail for the first question page and check it carefully to verify that the conversion process was successful.

   See *About ExamView HTML question importing* on the next page for information about how ExamView questions are converted to SMART Response questions.

7. Repeat step 6 for all questions in the assessment.

After you import the questions, see *Setting answers for imported questions* on page 63.

About ExamView HTML question importing

The following table shows how SMART Response software imports ExamView HTML question files.

This ExamView question type	Imports as this SMART Response question type
True or false	True or false
Modified true or false This is a two-part question: if the answer is false, the student modifies the question to make it true.	True or false
Multiple choice	Multiple choice Choice labels import in uppercase letters. Custom choice labels don't import.
Multiple answer	Multiple answer Choice labels import in uppercase letters. Custom choice labels don't import.
Yes or no	Yes or no
Numeric response	If the original answer is a decimal or fraction value, it imports as a Numeric, decimal, fraction question. If the original answer is a math expression, it imports as an Opinion Numeric, fraction, expression question.
Short answer or text answer	Text answer Only the first 20 characters of the answer import.
Matching	Content page
Problem	Text answer Only the first 20 characters of the answer import.
Essay	Text answer Only the first 20 characters of the answer import.
Case	Text answer Only the first 20 characters of the answer import.
Other	Text answer Only the first 20 characters of the answer import.

Exporting ExamView tests

You can export ExamView 5.2.0 and 6.2.1 online tests as HTML documents.

To export an HTML test document from ExamView 5.2.0

1. In ExamView Test Generator 5.2.0, select **File > Publish Online Test**.

   The *Publish Online Test* dialog box appears.

2. In Step 1, type a title for the assessment.
3. In Step 2, select the **Save test as an HTML document to your hard drive** option, and then click **Next**.
4. In Step 3, select the **Publish a study guide** option, and then click **Next**.

   IMPORTANT

   If you do not select the *Publish a study guide* option, you must manually add answer information to the questions.

   TIP

   You can also select the **Show Rational**, **Show Feedback** and **Show Reference** options. SMART Response converts any notes in the rational, feedback and reference boxes to SMART Notebook notes.

5. Type a file name for the HTML file, and then click **OK**.

   ExamView creates the HTML file and a **_files** folder containing all the image files used in the test.

To export an HTML test document from ExamView 6.2.1

1. In ExamView Test Generator 6.2.1, select **File > Export to HTML**.

   The *Export to HTML* dialog box appears.

2. Type a title for the assessment, select the **Export as study guide** option, and then click **OK**.

   TIP

   You can also select the **Show Rational**, **Show Feedback** and **Show Reference** options. SMART Response converts any notes in the rational, feedback and reference boxes to SMART Notebook notes.

3. Type a file name for the HTML file, and then click **OK**.

   ExamView creates the HTML file.

Setting answers for imported questions

After you import questions, you can set or change the answers to your assessment questions.

To set the answers for imported questions

1. In the *Page Sorter* tab, select the thumbnail for the first question page.
2. Select **Response > Set All Answers**.

   The *Set All Answers* dialog box appears.
3. Type or select the correct answers from the options for all questions, and then click **Done**.
4. Click **Save** .

   A *Save As* dialog box appears.
5. Browse to a folder, type a file name, and then click **Save**.

   You can run the question set on this computer or copy the SMART Notebook file to any computer that has SMART Response software installed.

Adding choices to a question

After you create a question, you can add choices to it.

To add a choice to a question

1. Click the **Page Sorter** tab.
2. Select the thumbnail of the question page you want to add a choice to.
3. Select **Response > Add Choice**.
4. Follow the on-screen instructions.
5. If you have to change the correct answer for the question, select **Response > Set All Answers**, and then make the changes.

   NOTE

   If you add choices to a true/false, yes/no, number/faction/decimal or text answer question, the question changes to multiple choice.

Tagging questions

You can select tags from a comprehensive list of educational standards and cognitive level tags for the questions you create in SMART Notebook software, or you can create custom tags. See *Adding questions using the Insert Question wizard* on page 51. You can also add tags or change the tags to questions after you finish creating an assessment.

Assigning tags to questions

To add or change tags in existing questions

1. Click the **SMART Response** icon in the Windows notification area or Mac menu bar, and then select **Open Notebook Software**.

   A blank SMART Notebook page appears.

2. Select **File > Open**, and then select your assessment file.

   The SMART Notebook file appears displaying the title page.

3. Select the thumbnail for the question page you want to add tags to.

   The question page appears.

4. Click the **SMART Response** tab, and then select the **Properties** tab.
5. If the *Tags* box isn't visible, click **Show** beside the *Answer Key* heading.
6. Click **Browse**.
7. If you want to choose from a large selection of educational standards or cognitive level tags, select your region, grade and subject, and then select one or more tags from the categories listed.

   If you want to select your custom tags, select one or more tags in the *Custom Tags* category.

   The selected tags appear in the *Tags for this question* field.

   TIP

   Tags that you select are stored in the Recent Tags category. Next time you tag questions you can select tags you've used before from this list instead of searching for them.

8. Click **Finish**.
9. Press **Page Up** or **Page Down** to select other questions as required, and then repeat steps 5 through 8.
10. Save your assessment.

Chapter 4

Starting and connecting to a class

Before class begins 66
- Safety tips for teachers 66

Starting a class 67
- About Sign In and Anonymous modes 67
- Starting a class in Anonymous mode 68
- Starting a class in Sign In mode 69
- Monitoring clickers 70

Connecting to the class 71
- Connecting in Anonymous mode 71
- Connecting in Sign In mode 73
- Manually connecting to a class 75
- Locking sign-in 76

Disconnecting students from a class 77
- Disconnecting all students 77
- Disconnecting individual clickers using Teacher Tools 77
- Students disconnecting manually 78

Completing assessments 79
- Starting an assessment 79
- Collecting question responses 83
- Reviewing results after an assessment 83
- Previewing results during an assessment 85

To use SMART Response interactive response system in your classroom, you must start a class and allow students to connect to it. You can monitor the student connections during the class and disconnect them when the class is done.

Before class begins

Safety tips for teachers

When using the SMART Response system with a SMART Board interactive whiteboard and a projector:

- Tell students not to look directly at the light beam from the projector. Instead, encourage them to keep their back to the projector when working at the interactive whiteboard. Before they turn to face the class, they should take a big step (or two) sideways.
- Make sure you don't look directly into the light beam from the projector. Keep your back to the class when you write over a projected image. Step to the side of the interactive whiteboard before you turn to face the class.
- Tell your students not to touch the projector, because it can become extremely hot during normal operation.
- Don't use a chair to increase a student's reach. If your students can't reach the top of the interactive whiteboard, lower it. You may need to remount a wall-mounted unit to a lower position. If your interactive whiteboard is mounted on a floor stand, lower it with the help of another adult.
- Tell students not to run in the vicinity of the floor stand, because they could trip over the floor stand's feet.

Starting a class

You can start a class in Sign In mode or Anonymous mode.

About Sign In and Anonymous modes

Before you start a class session, you must decide whether you want the system to operate in Sign In mode or Anonymous mode. This table summarizes the characteristics of each mode.

Sign In mode	Anonymous mode
Teachers use a class list that identifies each student by name and ID.	Teachers can operate the system without a class list.
Students can connect to the class, but they must sign in with their assigned ID.	Students can connect to the class without identifying themselves.
Teachers can control when students can sign in by locking a class.	Teachers can't control when students using clickers can sign in to their class.
Under the teacher's control, students can see their own grades, but they can't see any other students' grades.	Under the teacher's control, students can see their own grades, but they can't see any other students' grades.
If the *Remember names* check box is selected, teachers can identify individual students as they connect to the class.	Teachers can see how many students are connected.
Teachers can use Gradebook to save and analyze student and class performance over time.	Teachers are unable to save and analyze student and class performance over time.
Teachers can generate student and class reports.	Teachers are unable to generate Student or Class Performance reports.
Teachers can see, export and print the total class grade.	Teachers can see, export and print the total class grade.
Teachers can see, export and print total scores for each question.	Teachers can see, export and print total scores for each question.
Teachers can see, export and print each student's grade for each question and for the whole assessment.	Teachers are unable to identify student names or individual grades.
Teachers can review results during the assessment in the *Response* tab for the class as a whole and for individual students (if the *Remember names* check box is selected).	Teachers can view results for the class as a whole during the assessment in the *Response* tab.

Starting a class in Anonymous mode

You don't need a class list to operate SMART Response software in Anonymous mode. See *About Sign In and Anonymous modes* on the previous page for more information.

To start a class in Anonymous mode

In SMART Notebook software, select **Response > Start Class**, and then select **Anonymous Mode**.

- If students are using clickers, the receiver's Ready light flashes and then turns solid green, and the receiver's Transmit light flashes green.
- If SMART Response software is in CE mode, the name of the SMART Teacher file and class information appears in the student's SMART Notebook SE software *Quick Links* tab.

You can now ask the students to connect.

NOTES

- You can start a class and the assessment at the same time in SMART Notebook software by selecting **Response > Start Assessment**.

  If you don't have a class list, the class starts in Anonymous mode. If you do have a class list, a *No Classes Started* dialog box appears where you can select Anonymous mode.
- You can also start a class in Teacher Tools.
- If the students are already signed in to a class using clickers or SMART Notebook SE software and you select *Anonymous Mode*, the software switches to Anonymous mode.
- If the students are connected in Anonymous mode and you start a class that requires sign-in, the students are signed off and then asked to sign in.

Starting a class in Sign In mode

When you use SMART Response software in Sign In mode, you can monitor each student's responses and create reports on student and class performance. For more information, see *About Sign In and Anonymous modes* on page 67.

NOTE

Before you can start a class and have students connect in Sign In mode, you must have a class list. If you don't have a class list, you can create or import one. See *Creating a class list* on page 28.

IMPORTANT

Before you can use SMART Response software in LE mode, you must

- assign clicker IDs to each student's clicker. See *Pairing student clickers* on page 20.
- create a class with a class list containing the clicker IDs. See *Creating a class list in Teacher Tools* on page 28.

To start a class in Sign In mode

In SMART Notebook software, select **Response > Start Class**, and then select a class name.

- If students are using clickers, the receiver's Ready light flashes and then turns solid green, and the receiver's Transmit light flashes green.
- If SMART Response software is in CE mode, the name of the SMART Teacher file and class information appears in the student's SMART Notebook SE software *Quick Links* tab.

You can now ask the students to connect.

NOTES

- You can start a class and the assessment at the same time in SMART Notebook software by selecting **Response > Start Assessment**.
- If you don't have a class list, the class starts in Anonymous mode. If you do have a class list, a *No Classes Started* dialog box appears where you can select a class.
- You can also start a class in Teacher Tools.
- If the students are connected in Anonymous mode and you start a class that requires sign-in, the students are signed off and then asked to sign in.

Monitoring clickers

You can use Teacher Tools to see if a clicker is logged on or if it's in Anonymous mode. If the clicker is logged on, you can also see the student's name. You can see each clicker's hardware ID (MAC address) and identify which logged-on student is using it.

The display shows the signal strength of each clicker, as measured by the receiver. If the signal level is low for one or more clickers, and they are having communication problems, you can reposition the receiver or remove signal path obstructions.

To monitor clickers

1. Start a class and have your students connect their clickers.

   The SMART Response receiver indicator lights are green.

2. Start Teacher Tools. See *Starting Teacher Tools* on page 23.

   Teacher Tools appears.

3. Click the **Devices** button in the left column.

   The *Devices* window appears with the message "Your SMART Response receiver is connected and working". The receiver name appears below the Devices button.

   NOTE

   If the "Your SMART Response receiver is not connected" message appears, the SMART Response receiver isn't connected or isn't working properly. Check the receiver connections or repeat the receiver installation.

4. Click **My Receiver**, and then click the **Clickers** tab at the top of the window.

   The *Clickers* window appears and displays a table of all connected clickers. Each row of the table shows one clicker's signal strength, battery condition, student name and hardware ID (MAC address).

   NOTE

   If students' clickers are connected anonymously, the *Student Name* field displays *Anonymous*.

Connecting to the class

After you start a class, you can tell your students to connect to the class.

How the students connect to the class depends on SMART Response software's current mode. In addition, you can prevent students from signing in.

Connecting in Anonymous mode

You must start a class in Anonymous mode before your students connect. See *Starting a class in Anonymous mode* on page 68.

IMPORTANT

In all modes except VE mode, students must know the class name.

To connect PE clickers in Anonymous mode

When the "SMART Response is ready to use" balloon message appears, tell your students to follow this procedure.

1. Press the clicker's **Power** button for one second.

   A message appears asking if you want to join the last class the clicker was connected to or find a different class.

   Students using LE clickers see a "Hello" message on the clicker display.

2. Press the **Enter** button to join the last class.

   OR

   Press the **Down** button to select **Find a class**, and then press **Enter**.

   The clicker scans for classes, and then displays a list of classes within range. Press the **Up** and **Down** buttons to select the correct class, and then press **Enter**.

   NOTE

   If you have multiple receivers connected to your computer, students see multiple class names that are numbered to identify each receiver. For example, Math(1 and Math(2.

   Assign an equal number of students to each class to ensure optimum performance.

3. Press the **Enter** button to connect.

To connect XE clickers in Anonymous mode

When the “SMART Response is ready to use” balloon message appears, tell your students to follow this procedure.

1. Press the clicker’s **Power** button for one second.
2. Use the soft keys to join the last class.

   OR

   Use the soft keys to find a class, and then to select the class.

   NOTE

   If you have multiple receivers connected to your computer, students see multiple class names that are numbered to identify each receiver. For example, Math(1 and Math(2.

   Assign an equal number of students to each class to ensure optimum performance.

To connect LE clickers in Anonymous mode

Tell the students to press their clicker’s **Power** button for one second.

A “Hello” message appears on the clicker display.

To connect Internet-enabled devices in Anonymous mode

When you start an assessment in VE mode, an *Assessment Started* message appears showing the SMART Response VE website URL and the Assessment ID. Record this information, and then tell your students to follow this procedure.

1. Open an Internet browser and connect to response.smarttech.com.

   The *SMART Response VE* login dialog box appears.
2. Type the Assessment ID into the appropriate text box, and then click **Sign In**.

   NOTE

   The *Student ID* isn’t required in Anonymous mode.

   The question appears on the students’ screens.

To connect SMART Notebook SE software users in Anonymous mode

Tell your students to follow the steps described in the SMART Notebook SE software online Help system.

NOTES

- If you selected the *Lock Sign In* option, the student sees a “Fail to login” message. If this occurs, unlock Sign In, and then tell the students to reconnect.
- When all of your students are connected, you can start asking questions. Refer to *Creating assessments* on page 41 for information about using SMART Notebook software to ask questions and create assessments.

Connecting in Sign In mode

You must start a class in Sign In mode before your students connect. See *Starting a class in Sign In mode* on page 69.

IMPORTANT

When students use PE clickers, XE clickers or SMART Notebook SE software to connect to a class in Sign In mode, they must know the class name and a unique Student ID number.

When students use Internet-enabled devices (in VE mode), they must know the Assessment ID and a unique Student ID.

After you start a class, tell your students to follow one of the procedures below.

To connect PE clickers in Sign In mode

1. Press the clicker’s **Power** button for one second.

   A message appears asking if you want to join the last class the clicker was connected to or find a different class.

2. Press the **Enter** button to join the last class.

   OR

   Press the **Down** button to select **Find a class**, and then press **Enter**.

   The clicker scans for classes, and then displays a list of classes within range. Press the **Up** and **Down** buttons to select the correct class, and then press **Enter**.

   NOTE

   If you have multiple receivers connected to your computer, students see multiple class names that are numbered to identify each receiver. For example, Math(1 and Math(2.

   Assign an equal number of students to each class to ensure optimum performance.

   A connecting message appears, followed by a message asking for an ID number.

3. Press the number buttons to enter your ID number, and then press **Enter**.

   If the ID is valid, a message appears asking you to confirm your name.

   NOTE

   If the teacher selected the *Lock Sign In* option, a message appears on the clicker indicating that the student can't sign in at this time, and then a *Retry* option appears.

4. Press the **Enter** button to connect.

   A welcome message appears.

To connect XE clickers in Sign In mode

1. Press the clicker's **Power** button for one second.

   A message appears asking if you want to join the last class the clicker was connected to or find a different class.

2. Use the soft keys to join the last class.

   OR

   Use the soft keys to find a class, and then select the class.

   NOTE

   If you have multiple receivers connected to your computer, students see multiple class names that are numbered to identify each receiver. For example, Math(1 and Math(2.

   Assign an equal number of students to each class to ensure optimum performance.

   A connecting message appears, followed by a message asking for an ID number.

3. Press the number buttons to enter your ID number, and then press the soft key to sign in.

   If the ID is valid, a message appears asking you to confirm your name.

   NOTE

   If the teacher selected the *Lock Sign In* option, a message appears on the clicker indicating that the student can't sign in at this time, and then a *Retry* option appears.

4. Press the soft key to connect.

   A welcome message appears.

NOTE

If a student attempts to sign in using an ID that another student is already using, a message appears indicating that they're unable to sign in and lets them retry.

To connect LE clickers in Sign In mode

Tell your students to press their clicker's **Power** button for one second.

A "Hello" message appears on the clicker display.

When all of your students are connected, you can start asking questions. Refer to *Creating assessments* on page 41 for information about using SMART Notebook software to ask questions and create assessments.

To connect Internet-enabled devices in Sign In mode

When you start an assessment in VE mode, an *Assessment Started* message appears showing the SMART Response VE website URL and the Assessment ID. Record this information, and then tell your students to follow this procedure.

1. Open an Internet browser and connect to response.smarttech.com.

   The *SMART Response VE* login dialog box appears.

2. Type the Assessment ID and Student ID into the appropriate text boxes, and then click **Sign In**.

   The question appears on the student's screens.

To connect SMART Notebook SE software in Sign In mode

After you start a class, tell your students to sign in by following the procedure described in the SMART Notebook SE software online Help system.

Manually connecting to a class

IMPORTANT

You can perform this procedure only if SMART Response software is in CE mode.

After you start a class, students can connect to it automatically by following the steps in the SMART Notebook SE software online Help system. Students can also connect manually by entering your class's Internet Protocol (IP) address and port number.

The following procedure explains how to find this information so you can provide it to your students.

To find your class's IP address and port number

1. Start **Teacher Tools**. See *Starting Teacher Tools* on page 23.

   Teacher Tools appears.

2. Ensure that your class is started.
3. Click **Connect students manually** on the *Home* tab.

   The *Manual Connection Information* screen appears and displays your class's IP address and port number.

Locking sign-in

You can block students from signing in to your class. Select the **Lock Sign In** button to block students from signing in before you're ready or to block late students from signing in. When you start a class, sign-in is unlocked by default. If you stop and restart SMART Response software or open a new class list, sign-in unlocks.

NOTES

- In PE, LE and XE modes, you can lock sign-in only in Sign In mode.
- In CE mode, you can lock sign-in in Sign In and Anonymous modes.
- You are unable to lock sign-in in VE mode.

To block students from signing in

1. Start **Teacher Tools**. See *Starting Teacher Tools* on page 23.

   Teacher Tools appears.

2. If a class isn't already started, select a class in the *Gradebook* area, and then click **Start Class**.
3. Click **Lock Sign In**.

   Students are unable to sign in.

NOTE

If students disconnect from your class when sign-in is locked, they're unable to sign in again until you click **Unlock Sign In**.

Disconnecting students from a class

You can disconnect students from a class in three ways. You can disconnect them simultaneously. disconnect individual clickers using Teacher Tools or students can manually disconnect.

NOTE

You can't disconnect students using Teacher Tools when in VE mode.

Disconnecting all students

You can disconnect all students simultaneously.

To disconnect all students by stopping the class

Select **Response > Stop Class** in the SMART Notebook menu bar.

- All clicker-connected students disconnect, and a message appears on their clickers indicating that the class is over and that the clickers are turning off. The Transmit and Receive lights on the receiver turn off and the Ready light turns red.
- All SMART Notebook SE software-connected students disconnect from the class, and a message appears stating "All students are signed out".

Disconnecting individual clickers using Teacher Tools

NOTE

This option is available only if the students are connected to a class in Sign In mode.

To disconnect individual clickers using Teacher Tools

1. Start **Teacher Tools**. See *Starting Teacher Tools* on page 23.
2. Select the active class in the *Gradebook* area.
3. Click the **Students** tab.
4. Select the row of the student you want to disconnect.

   The *Properties* window appears below the student list table.
5. Click **Disconnect Clicker** at the top-right corner of the window.

   The *Log Off Student* dialog box appears.

6. Click **OK** to disconnect the student.

> **NOTE**
>
> The student can log back on immediately.
>
> If you don't want the student to be able log on for a while, select **Also ban this student for**, select the number of minutes, and then click **OK**.

Students disconnecting manually

Students with SMART Response clickers can disconnect them by pressing the **Power** button for one to two seconds.

If signed-in students turn off their clickers when a question set is started, they can turn on the clickers, sign in with the same ID and join the assessment in progress without losing any previous answers. If students are connected anonymously, they lose any previous answers when they reconnect.

To disconnect after connecting to the wrong class

Tell students using	to disconnect by
PE clickers	pressing the **Menu** button, selecting **Sign out** and then pressing the **Enter** button.
XE clickers	pressing the **Sym** button, pressing SPACEBAR, and then selecting **Log Out**. They can then connect and sign in to the correct class without turning off their clickers.
LE clickers	turning off their clickers. They can then turn them back on to connect.
SMART Notebook SE software	clicking **Disconnect**, and then signing in to the correct class.
Internet-enabled devices	connecting to response.smarttech.com, and then signing in to the correct assessment.

> **TIP**
>
> For more information on how students connect to SMART Response CE classes using SMART Notebook SE software, see the SMART Notebook SE software online Help.

In Sign In mode, if students disconnect during an assessment, they can sign in with the same ID to join the assessment without losing the answers they previously entered. In Anonymous mode, students lose any previously entered answers when they reconnect.

Completing assessments

After you create an assessment, you can start it in SMART Response software. Students then complete the assessment. During the assessment, you can view results.

Starting an assessment

When you use SMART Notebook software to ask questions, SMART Response software uses the options you set in Teacher Tools to control how students interact with the teacher. If students are using clickers, before starting a SMART Response assessment, check that the receiver is connected and ready. If you don't have a SMART Notebook assessment file, you must create one. See *Creating an assessment* on page 41 for more information.

To open an assessment and set options

1. Click the **SMART Response** icon in the Windows notification area or Mac menu bar, and then select **Open Notebook Software**.

   A blank SMART Notebook page appears.

2. Select **File > Open**.

3. Select the SMART Notebook file containing your questions, and then click **Open**.

   The assessment file's title page appears.

4. Click the **Response** tab, and then click **Properties** if it isn't already selected.

5. Select one of the following options to set the *Assessment Delivery* mode.

   NOTE

   The *Assessment Delivery* mode options are available only in PE, XE, VE or Multiple devices mode.

Allow students to answer...	Description
All questions at their own pace.	This is the default mode. Students that have access to the assessment can answer questions as quickly or as slowly as they want.
The currently displayed question only.	Teachers must start each question, wait for student responses, and then stop the question before they can move to another question. This mode allows teachers to control the progress of the assessment while monitoring how students answer each question. On the toolbar, the **Start Assessment** icon changes to a **Start Question** icon.

6. Select the **Remember names** check box to display student names in the *Response* tab during the assessment.

   OR

   Clear the **Remember names** check box to hide student names in the *Response* tab during the assessment.

   NOTES

   - Select the **Remember names** check box if you want to identify students when you review results during the assessment.
   - Clear the **Remember names** check box if you want to display the SMART Notebook file on a SMART Board interactive whiteboard during the assessment but don't want students to see each other's results.
   - You can review, print and export the results after the assessment even if you clear the **Remember names** check box.

7. Select one of the following options from the *Show results to students* drop-down list:

   NOTE

   The available feedback options vary depending on the SMART Response mode.

Feedback option	Description
After you stop collecting responses	Students can see how they answered and see their grades after you click **Stop**. If you select this option, you can also choose to show the correct answers with grades and show the class average.
After all questions are answered	Students can see how they answered and see their grades after they finish answering all questions. If you select this option, you can also choose to show the correct answers with grades and show the class average.
After each question is answered	Students can see how they answered each question and see their grades after they finish answering all questions. If you select this option, you can also choose to show the correct answers with grades and show the class average.
Don't show students their grades	Students can't see how they answered or see their grades.
Don't allow students to save assessment	Students using SMART Notebook SE software can't save the assessment to their binders after they finish.

To start an assessment and ask questions in PE, XE and CE modes

1. Start a class if you haven't already done so.
2. Have your students connect to the class, if they haven't already done so.
3. Select **Response > Start Assessment**.

   The *Response* tab opens with the *Progress* button selected.

   If you're displaying the questions on a screen, you can control the students' progress by selecting each question page in turn.
4. Use the **Forward** or **Back** button on the menu bar to open a question page.

   OR

   Click the **Page Sorter** tab, and then select the thumbnail of a question page.
5. Click **Response > Stop Assessment** in the menu bar to end the session.
6. If you chose to show results to students, select **Response > End Review Mode** when the students are done reviewing their results.
7. Click **Save** to save the results.

To start an assessment and ask questions in LE mode

1. Start a class, if you haven't already done so.
2. Have your students connect to the class, if they haven't already done so.
3. Select **Response > Start Assessment**.

   The *Response* tab opens with the *Progress* button selected.

   If you're displaying the questions on a screen, you can control the students' progress by selecting each question page in turn.
4. Use the **Forward** or **Back** button on the menu bar to open a question page.

   OR

   Click the **Page Sorter** tab, and then select the thumbnail of a question page.
5. Click **Start Question** on the toolbar.

   The *Response* tab opens with the *Progress* button selected.
6. Ask your students to answer the question with their clickers.

7. When the “All the students have answered” message appears in the *Response* tab, click **Stop Question** .

   A chart showing your students’ results and several options appears in the *Response* tab. Select the options you want.

8. Repeat steps 4 through 7 for each question in your assessment.

   NOTE

   You must stop the current question before you can ask another question.

9. Click **Response > Stop Assessment** in the menu bar to end the session.
10. If you chose to show results to students, select **Response > End Review Mode** when the students are done reviewing their results.
11. Click **Save** to save the results.

To start an assessment and ask questions in VE mode

1. Start a class, if you haven’t already done so.
2. Select **Response > Start Assessment**.

   The *Assessment Started* dialog box appears displaying the URL and Assessment ID that the students need to connect to the assessment.

   TIP

   If you click **QR Code**, an image appears which students can scan using a QR code reader app on their mobile devices. Scanning the QR code loads the assessment in the browser on their mobile devices. Click outside the image to return to the *Assessment Started* dialog box.

   The *Response* tab opens with the *Progress* button selected.

3. Tell your students to browse to **response.smarttech.com**, and then enter their Student IDs and the Assessment ID.

   The assessment appears on their browsers.

4. When all your students are connected, click **OK** to close the *Assessment Started* dialog box.
5. Use the **Forward** or **Back** button on the menu bar to open a question page.

   OR

   Click the **Page Sorter** tab, and then select the thumbnail of a question page.

6. Click **Response > Stop Assessment** in the menu bar to end the session.
7. Click **Save** to save the results.

Collecting question responses

NOTE

Make sure that you start your class and that all the students using clickers are connected before you ask questions.

To collect question responses

1. Select **Response > Start Assessment**.

   If you haven't started a class, a message appears asking you to select a class. Select a class, and then click **Start Class**.

   A message appears on the clickers asking the students to respond.

2. After all students answer the questions, select **Response > Stop Assessment**.

   NOTE

   SMART Notebook software stores the results in your document. Remember to save your document after you collect responses.

3. If you want to save the questions as a SMART Notebook file, select **File > Save** (or **Save As**).

   A *Save As* dialog box appears.

4. Browse to a destination folder, type a file name, and then click **Save**.

Reviewing results after an assessment

You can use SMART Response software to collect and display results instantly after you run an assessment. You can use assessments as an interactive learning tool and as a way to give students continual feedback on what they're learning. Results for each question can be displayed as a bar chart or a pie chart. For numeric and text questions, you can also view student results using the Word Cloud Results Visualizer. The results appear in the word cloud as separate text boxes that increase in size for each instance of that answer.

To display class assessment results

1. After all students answer the questions, return to the assessment's title page.
2. Click SMART Notebook's **Response** tab if it isn't already open.
3. Select **Progress > Stop this assessment**.

   The *Progress* button changes to *Results*. A summary of the class's performance appears, including a chart showing the class's responses to each question.

4. If you want to view more detailed class results, click **Show** beside *Details*.

   A list of students, their grades and the duration of the assessment appears.

   IMPORTANT

   Use discretion when displaying sensitive grade information to all class members. If you started the class in Sign In mode, consider clearing the **Remember names** check box before you start the assessment to hide student names in the *Response* tab. (You can later review, print and export the results in Teacher Tools.)

   NOTE

   If you start the class in Anonymous mode or clear the *Remember names* check box before you start the assessment, student names display as *Anonymous-1*, *Anonymous-2*, and so on.

To display results for each question

1. Click the **Page Sorter** tab, and then select a question.
2. Click the **Response** tab, and then select **Results**.

   A summary of the class's responses to the question appears, including a chart showing the number of responses to each possible answer.

   TIPS

   - You can change the type of chart displayed by selecting **Show bar chart** or **Show pie chart**.
   - You can insert the chart into the question page by clicking **Insert chart into Notebook**.

3. Click **Show** beside *Details*.

   A list showing each student's submitted response appears, including the time it took to respond.

   IMPORTANT

   Use discretion when displaying sensitive grade information to all class members. If you started the class in Sign In mode, consider clearing the **Remember names** check box before you start the assessment to hide student names in the *Response* tab. (You can later review, print and export the results in Teacher Tools.)

   NOTE

   If you start the class in Anonymous mode or clear the *Remember names* check box before you start the assessment, student names display as *Anonymous-1*, *Anonymous-2*, and so on.

To display the students' answers in a word cloud

1. Click the **Page Sorter** tab, and then select a question.
2. Click the **Response** tab, and then select **Results**.

   A summary of the class's responses to the question appears.
3. Click **Insert Word Cloud into Notebook**.

   All submitted answers to the question appear in a word cloud on the question page. If more than one student submitted the same answer, it displays in a larger font size.
4. Click **Privacy: Off** or **Privacy: On** to hide and display results in the word cloud.
5. Click **Correct Answer** to highlight the correct answer in the word cloud.

   NOTE

   The **Correct Answer** button is gray if no one submitted the correct answer to the question.

Previewing results during an assessment

You can use SMART Response software to display results instantly while you run an assessment. You can use assessments as an interactive learning tool and a way to give students continual feedback on what they're learning.

IMPORTANT

You must have two or more students participating in your assessment to use this feature.

To preview class assessment results

1. Start your assessment, if it isn't already running.
2. Display the question using the **Page sorter** or the left and right arrows.
3. Click SMART Notebook software's **Response** tab, and then select the **Progress** button.
4. Click **Show** beside *Results Preview*.

   A chart showing the class's current responses to the question appears.

   NOTES

   - The chart changes as students answer the question, and change their answers.
   - Select the assessment's title page to preview a summary of the progress of all the assessment's questions. You can use this chart to see how much of the assessment the class has completed.

Chapter 5
Using clickers

About SMART Response PE clickers 88
Changing SMART Response PE clicker settings 89
Changing the PE clicker's language 89
Answering yes or no questions 89
Answering true or false questions 90
Answering multiple choice questions 90
Answering multiple answer questions 91
Answering number, fraction or decimal questions 91
Answering text answer questions 93
About SMART Response LE clickers 95
Using the Teacher mode menu 96
Changing the LE clicker's language 97
About SMART Response XE clickers 98
Asking questions 99

After students connect their clickers to your class, they can use their clickers to complete assessments.

In addition, students using SMART Response PE or XE clickers can ask questions using their clickers and change their clicker settings.

About SMART Response PE clickers

SMART Response PE clickers are available with English keypads or with Russian keypads.

English keypad

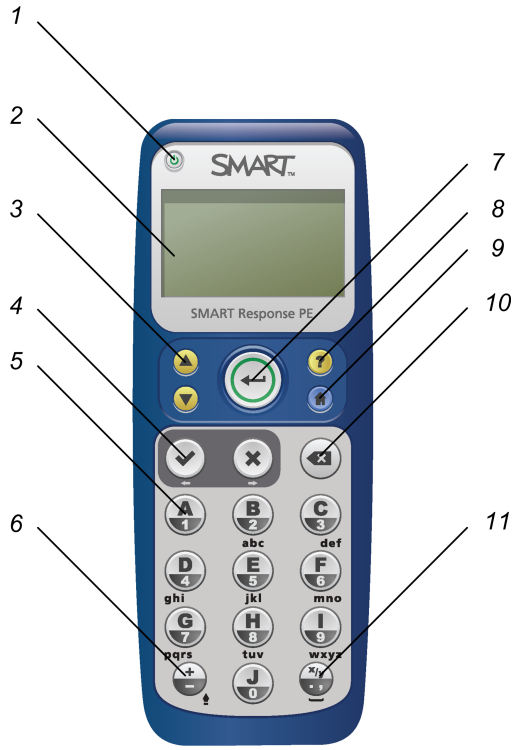

Russian keypad

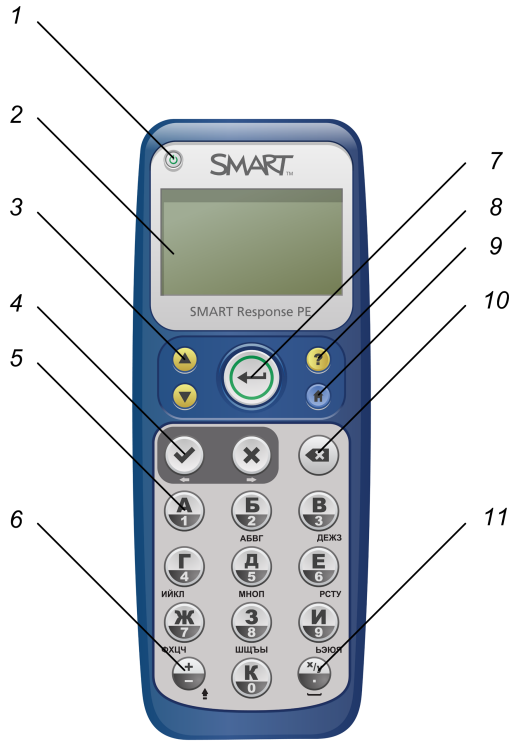

No.	Name	No.	Name
1	Power button	7	Enter button
2	Screen	8	Ask question button
3	Selection (Arrow) buttons	9	Menu button
4	Agree/Not agree buttons	10	Delete button
5	Alphanumeric keys	11	Fraction/Decimal (Spaces) button
6	± (Shift) button		

Changing SMART Response PE clicker settings

Students can press the **Menu** button at any time to log off the session or to modify the clicker's settings. These options are available in the menu:

Option	Description
Sign out	Press to log off a class without turning off the clicker.
Language	Press to select the language of the text shown on the clicker's display. See *Changing the PE clicker's language* below.
Contrast	Press to brighten or darken the clicker's LCD display. Use the selection buttons to increase or decrease the contrast.
Device info	Press to display the clicker's MAC address and firmware version.
Advanced	You must have a valid security code to open this menu. Your customer support representative can provide the code to help troubleshoot clicker problems.

Changing the PE clicker's language

The English/French model of the SMART Response PE clicker defaults to the English language and the Russian/English model defaults to the Russian language. The first time an English/French clicker is turned on, it prompts you to select the language you want it to display. If you don't select a language, it defaults to display English.

Students can change the language of their SMART Response PE clickers by performing the following procedure.

To change the PE clicker's language

1. Turn the clicker on.
2. Press the clicker's **Menu** button.
3. Browse to **Language** using the **Up** and **Down** buttons, and then press **Enter**.
4. Select the language using the **Up** and **Down** buttons, and then press **Enter**.

   The clicker returns to the *Welcome* display in the language you selected.

Answering yes or no questions

Students can answer yes or no questions using these two buttons on their clickers:

Answering true or false questions

Students can answer true or false questions using these two buttons on their clickers:

NOTE

These are the same buttons students use to answer yes or no questions.

Answering multiple choice questions

Students can answer multiple choice questions using the following buttons on their clickers:

English keypad

Russian keypad

EXAMPLE

English keypad:

To answer D, a student would press

.

Russian keypad:

To answer Г, a student would press

.

Answering multiple answer questions

Students can answer multiple answer questions using the following buttons on their clickers:

English keypad

Russian keypad

EXAMPLE

English keypad:

To answer A and D, a student would press and then press .

Russian keypad:

To answer A and Г, a student would press and then press .

Answering number, fraction or decimal questions

Students can enter numbers using the following buttons on their clickers:

English keypad

Russian keypad

To enter a decimal number

1. Enter the numbers to the left of the decimal point.
2. Press .
3. Enter the numbers to the right of the decimal point.

To enter a fraction

1. Enter the numerator.
2. Press .
3. Enter the denominator.

To enter a mixed fraction

1. Enter the whole number.
2. Press .
3. Enter the numerator.
4. Press .
5. Enter the denominator.

To change a number from positive to negative (or vice versa)

Press .

Answering text answer questions

Students can answer text questions using the following buttons on their clickers:

English keypad

Russian keypad

Responding to text answer questions on a SMART Response PE clicker is similar to texting on a cell phone.

EXAMPLE

To respond “iron”, a student would do the following:

English keypad:

1. Press

three times to enter *i*.
2. Press

three times to enter *r*.
3. Press

three times to enter *o*.
4. Press

two times to enter *n*.

Russian keypad (железо):

1. Press three times to enter *ж*.
2. Press two times to enter *е*.
3. Press four times to enter *л*.
4. Press two times to enter *е*.
5. Press four times to enter *з*.
6. Press three times to enter *о*.

IMPORTANT

Text answers are case sensitive. If the only acceptable answer to a text answer question is “Iron”, students must enter “Iron” and not “iron” or “IRON”.

To change to uppercase, students press on their clickers.

To enter a space

Press .

To make a change

1. Use the arrow buttons to move the cursor to the character you want to change.
2. Press the **Delete** button to delete the character.
3. Enter a new character.

About SMART Response LE clickers

The students use only the Power, Selection and Answer buttons. The other buttons are for Teacher mode. See *Using the Teacher mode menu* on the next page.

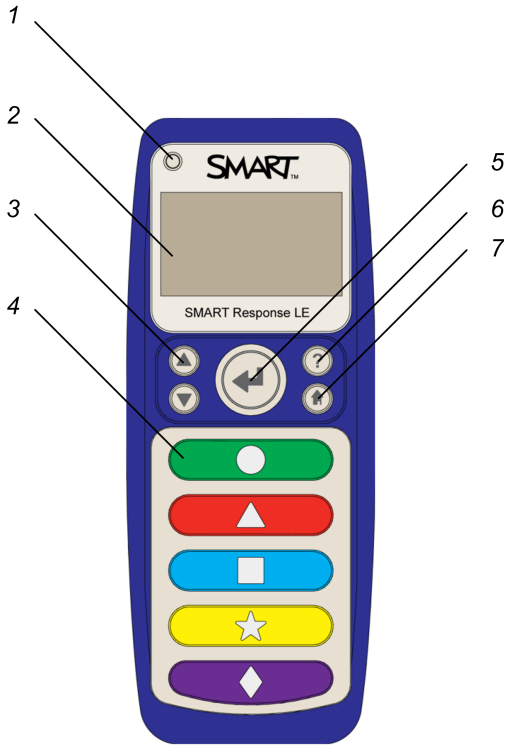

No.	Name	Description
1	Power	Press for one second to turn on the clicker. Press for one to two seconds to turn off the clicker.
2	Screen	N/A
3	Selection	Scroll through option lists.
4	Answer	Five colored buttons with geometric shapes to answer questions.
5	Enter	Make or confirm a selection.
6	Ask Question	Displays the clicker ID.
7	Menu	Press with the **Power** button to open the clicker menu in Teacher mode. See *Using the Teacher mode menu* on the next page.

Using the Teacher mode menu

To put SMART Response LE clickers into Teacher mode

1. Press the **Power** and **Menu** buttons simultaneously.

   NOTE

   You can press the **Menu** button by itself without any effect.

2. Press the **Enter** button to make your selections. Press the **Menu** button to return to the primary menu.

The following options are available in the Teacher mode menu:

Option	Description
Scan & Pick	Pair the clicker with your receiver during setup.
Clicker ID	Set the Clicker ID.
Show Rcv PID	Display the current Pan ID.
Language	Display the list of supported languages. See *Changing the LE clicker's language* on the next page.
Contrast	Lightens or darkens the clicker's LCD display. Use the up and down arrows to increase or decrease the contrast.
Device Info	Display the clicker's MAC address and firmware version.
Restore Default	Restore the clicker's factory default settings.
Exit	Exit Teacher mode to connect to the class.

Changing the LE clicker's language

SMART Response LE clickers support the following languages on their display:

Language	Display
English	English
French	Français
Russian	Русский
German	Deutsch
Spanish	Español
Italian	Italiano

The first time a SMART Response LE clicker is turned on, it prompts you to select the language you want it to display. If you don't select a language, it defaults to display English.

To set the LE clicker's language the first time

1. Turn the clicker on.

   The list of languages appears.

2. Select the language using the **Up** and **Down** buttons, and then press **Enter**.

   The clicker returns to the *Welcome* display in the language you selected.

Teachers can change the language of SMART Response LE clickers by performing the following procedure.

To change the LE clicker's language

1. Turn the clicker on.
2. Put the clicker into Teacher mode (see *Using the Teacher mode menu* on the previous page).
3. Browse to **Language** using the **Up** and **Down** buttons, and then press **Enter**.
4. Select the language using the **Up** and **Down** buttons, and then press **Enter**.

   The clicker returns to the *Welcome* display in the language you selected.

About SMART Response XE clickers

No.	Name	Function
1	Power button	Press and hold to turn clicker on or off.
2	LCD display	N/A
3	Soft keys	Press to select functions displayed on the LCD display. The functions depend on the clicker's mode. Press to answer multiple choice, multiple answer, true/false and yes/no questions.
4	Letter and number keys	Press to insert lowercase value. Press while holding the **Shift** key to insert an uppercase value. Press and hold **a**, **e**, **i**, **o**, **u**, **y**, **c** or **n** keys to select other character variations.
5	Directional keypad	Press to navigate menu options or navigate text and mathematic expression content.
6	Spacebar/Menu button	Press to add a space in text or mathematical expressions. Press after pressing the **Sym** key to display a menu where you can select **Raise hand**, **Symbols** or other functions depending on clicker mode.

No.	Name	Function
7	Fraction key	Press to insert fractional values in an expression.
	Root key	Press to insert a square root value in an expression. Press after pressing the **Sym** key to insert a radicand.
	Superscript/subscript key	Press to insert a superscript value in an expression. Press after pressing the **Sym** key to insert a subscript value in an expression.
8	Symbol key	Press and release to select green key functions. Press and hold to display a menu where you can select symbols.
9	Shift key	Press and then press a letter key to enter an uppercase character.

Asking questions

At any time during a class, students using SMART Response PE or XE clickers can request the teacher's attention.

- Students using SMART Response PE clickers can press the **Ask Question** button.
- Students using SMART Response XE clickers can press the **Sym** button, press the spacebar, and then select **Raise hand**.

Teacher Tools displays the number of students who have questions on the *Home* tab beside the *Questions* heading.

To identify students with questions

1. Click the **Students** tab in *Teacher Tools Gradebook* to show the list of student names and IDs.

   In the *Status* column, you might see one or more rows with a question icon .
2. If you've answered a student's question, select the row that displays the student's name, and then click the **Clear Question** icon in the top-right corner of the *Properties* window.

Chapter 6

Reviewing, printing and exporting assessment results

Importing assessment results 102
- Formatting the results files for importing 102
- Importing a class results file 102
- File formatting 103

Reviewing assessment results 103
Flagging results 106
Generating Student Performance reports 107
- Choosing a report 107
  - Student Performance report 107
  - Student Comparison report 108

Generating Class Performance reports 109
- Choosing a report 109
  - Class Performance report 109
  - Class Comparison report 110

Printing and exporting questions and results 112
- Printing from SMART Notebook software's Response menu 112
- Exporting results 113
- Exporting questions 115

The Teacher Tools Gradebook gives you quick access to test results, making it easy to prepare reports and conduct evaluations. Reports can be as simple or as detailed as you need. You can create high-level comparisons of class performance, specific reports based on tagged characteristics such as demographics or curriculum standard and personalized reports on how individual students perform. You can also create reports that show grades for the entire school year.

You can display results and generate reports to review during an assessment or after you run an assessment. In addition, you can print or export questions and assessment results.

NOTE

Assessment results for students aren't saved in Anonymous mode.

Importing assessment results

You can import the results of an assessment that you performed without using your SMART Response system. You can then generate reports that combine the results from your assessments with the imported results.

You can import results using either comma separated values (CSV) files or Microsoft Excel files (Windows operating systems only).

NOTE

The ID numbers you use in the list you import must match the ID numbers assigned to the students in the class list that you're using.

Formatting the results files for importing

You must use the headings **ID Number** and **Marks** when you format the CSV, XLS or XLSX file for importing. If you're using information from another program, copy it to a new file and then format it as shown in *File formatting* on the next page.

Importing a class results file

You can import a class results file using Teacher Tools.

To import a class results file

1. Start **Teacher Tools**. See *Starting Teacher Tools* on page 23.

   Teacher Tools appears.

2. In the *Gradebook* area, select the class you want to import the results to.
3. Click **Import** on the menu bar, and then select **Assessments**.
4. Click the target class, and then click **Next**.
5. Type the title, and then select the type of the assessment. Optionally, type the subject and topic information.
6. Select the **Percentage** or **Raw values** score formats, and then click **Next**.
7. Select the file type, and then click **Next**.
8. Browse to and select the file, and then click **Open**.

   The student results information appears in the *Students* and *Assessments* tabs. You can also generate reports that include the imported scores.

File formatting

Comma separated values (CSV) file:

EXAMPLE

```
ID Number,Marks
8781,33
8727,32
8534,18
2504,22
8759,29
8753,35
8815,25
8811,28
8716,26
```

Excel spreadsheet (XLS) file:

EXAMPLE

	A	B
1	ID Number	Marks
2	8781	33
3	8727	32
4	8534	18
5	2504	22
6	8759	29
7	8753	35
8	8815	25
9	8811	28
10	8716	26

Reviewing assessment results

After you run and stop an assessment, Teacher Tools records the class results and each student's results. At any time after you run an assessment, you can review the student, question or assessment results and performance. If you ask a series of questions consecutively, their results are aggregated so that you can review them as a single assessment.

NOTE

Use discretion when displaying sensitive information to all class members. To hide sensitive information, click the **Privacy: Off** indicator before you display student or assessment results. See *Adjusting privacy and alert options* on page 25 for more information.

To display student results

1. If a class is running, stop it.
2. In *Teacher Tools*, select the class name in the *Gradebook* area.

   The class window appears with the *Home* tab selected.
3. Click the **Students** tab.

   After a short delay, a table of results appears. If you previously turned on Privacy mode, the student IDs and average scores appear as gray shapes in the table.
4. If Privacy mode is on, click the **Privacy: On** indicator .

   The columns of the table of class results show the student names, ID and average score for all the assessments each student has participated in.

To display detailed results for each student

1. Complete the above procedure, and then select the student's row.

   The student's information appears in the lower pane.
2. Click the **Performance** tab.

   An *Assessment Results over Time* graph appears showing the student's results compared to the class average for all assessments since the first assessment was run.

   NOTE

   The graph is hidden when Teacher Tools is in Privacy mode.
3. Place your pointer over the graph to display details about the specific assessment.
4. Click the **Results** tab.

   A table appears showing detailed information about each assessment the student has participated in, including the date and the score the student achieved. If the student's score is below the passing grade you defined when you created the class, the score appears in red. See *Changing a class's passing grade* on page 37 for information.

To display class assessment results

1. If a class is currently running, stop it.
2. In *Teacher Tools*, select the class name in the *Gradebook* area.

   The class window appears with the *Home* tab selected.
3. Click the **Assessments** tab.

   After a short delay, a table of results appears listing all assessments that the class has participated in, including the class average score for each assessment. If the class average score is below the passing grade you defined when you created the class, the score appears in red. See *Changing a class's passing grade* on page 37 for information.

To display detailed results for each assessment

1. Complete the previous procedure, and then select the assessment's row.

   The lower pane of the window displays the assessment's properties.
2. Click the **Performance** tab.

   A *Student Achievement per Question* graph appears showing the student responses to each question.

   NOTE

   The graph is hidden when Teacher Tools is in Privacy mode.
3. Place your pointer over the graph to display details about the specific questions.
4. Click the **Results** tab.

   A table appears showing the mark each student received for the assessment. If the student's score is below the passing grade you defined when you created the class, the mark appears in red.

To display and change results for each question in an assessment

1. If a class is running, stop it.
2. In *Teacher Tools*, select the class name in the *Gradebook* area.

   The class window appears with the *Home* tab selected.
3. Click the **Assessments** tab.

   After a short delay, a table of results appears listing all assessments that the class has participated in.
4. Select the row for the assessment you want to display.

5. Click the **Questions** tab.

   A list of the assessment's questions appears showing the student responses to each question.

6. If you want to change an answer to be graded as correct or incorrect, select the question you want to change, and then select or clear the **Correct** checkbox.

   The student grades and the class average change.

Flagging results

You can add a blue flag to a student's results as a visual reminder to follow up for any reason, for example, if a student requires remedial work. You can also clear the blue flag from the student's results.

NOTE

If students are disconnected during an assessment, a *Disconnected Student* icon appears beside their names. To clear this flag, see *Importing student responses* on page 123.

To add a follow-up flag

1. Start **Teacher Tools**. See *Starting Teacher Tools* on page 23.

   Teacher Tools appears.

2. Select the class the student belongs to in the *Gradebook* class list.

   The class information appears.

3. Click the **Students** tab.

4. Select the student's name in the list.

   The student's information appears in the lower pane.

5. Click the **Results** tab.

6. Select the assessment result you want to flag in the list.

7. Click the **Set flag** icon above the results list.

   A blue flag appears in the *Mark* column.

To clear a follow-up flag

1. In the *Results* tab, select the assessment result with the flag you want to clear.
2. Click the **Clear flag** icon above the results list.

   The flag disappears.

Generating Student Performance reports

You can generate Student Performance reports any time after your assessments are complete. Some reports help you analyze student performance by educational standards and cognitive levels. Other reports enable you to compare performance between students. You can tailor the reports to include all classes or only classes that you select. You can choose from these report types:

- Assessment summary
- Educational standards
- Cognitive levels
- Question performance
- Performance summary

Choosing a report

Student Performance report

Use the following chart to help you choose your Student Performance report type.

Report type	Contents
Assessment summary	Student and class averages for each assessment selected
Educational standards	Student and class averages across selected assessments for each educational standard selected
Cognitive levels	Student and class averages across selected assessments for each cognitive level selected
Question performance	A table with the students' responses for each question in the selected assessments
Performance summary	Several charts related to student performance

NOTE

If you select more than one student, an individual performance report is created for each student selected.

Student Comparison report

Use the following chart to help you choose your Student Comparison report type.

Report type	Contents
Assessment summary	The averages for the selected students for each assessment selected
Educational standards	The averages for the selected students across selected assessments for each education standard selected
Cognitive levels	The averages for the selected students across selected assessments for each cognitive level selected
Question performance	A table with the selected students' responses for each question in the selected assessments

To generate a Student Performance report

1. Start **Teacher Tools**. See *Starting Teacher Tools* on page 23.

   Teacher Tools appears.

2. In the *Reports* area, click **Student Performance**.

   NOTE

   If you want to generate a report comparing student performance, select **Student Comparison**.

   The *Student Performance* window appears.

3. Select the type of report you want from the *Choose a report type* list.
4. Select a class or **All classes** from the *Classes* drop-down list.
5. If you want to include specific students in your report, click **Change**, and then select the students.
6. If you want to include specific assessments in your report, click **Change**, and then select the assessments.
7. If the *Educational standards* or *Cognitive levels* headings appear, click **Change**, and then select the options you want to include.

8. If you want to specify a performance range for your report, enter the percentage range in the *Performance threshold* area.
9. If the *Show* heading appears, select the type of chart you want to display.
10. Select one of the following options:

Option	Result
Preview	A *Preview* window appears showing the report with one page for each student selected.
Save Report	After prompting you to name the report, Teacher Tools saves the report so that you can view or process it later.
Export	After you select the student name and ID formatting, the report saves as a comma separated values (CSV) file to your desired folder.
Create PDF	Saves the report as one or more .pdf files to your desired folder. A unique .pdf file is created for each student selected.

Generating Class Performance reports

You can generate Class Performance reports any time after your assessments are complete. Some reports help you analyze class performance by educational standards and cognitive levels. Other reports allow you to compare performance between classes. You can tailor the reports to include all classes or only the classes that you select. You can choose from these report types:

- Assessment summary
- Educational standards
- Cognitive levels
- Question performance
- Performance summary

Choosing a report

Class Performance report

Use the following table to help you choose your Class Performance report type.

Report type	Contents
Assessment summary	The class averages for each assessment selected

Report type	Contents
Educational standards	The class average across selected assessments for each educational standard selected
Cognitive levels	The class average across selected assessments for each cognitive level selected
Question performance	The percentage of students that answered correctly or incorrectly for each question in the selected assessments
Performance summary	Several charts related to class performance

NOTE

If you select more than one class, an individual performance report is created for each class selected.

Class Comparison report

Use the following table to help you choose your Class Comparison report type.

Report type	Contents
Assessment summary	The averages for the selected classes for each assessment selected
Educational standards	The averages for the selected classes across selected assessments for each educational standard selected
Cognitive levels	The averages for the selected classes across selected assessments for each cognitive level selected
Question performance	The percentage of students that answered correctly in each of the selected classes for each question in the selected assessments

NOTE

Only assessments that are common between classes appear in the *Select Assessments* dialog box. The assessments you want to compare between classes must have the same Title, Subject, Topic and Type.

To generate a Class Performance report

1. Start **Teacher Tools**. See *Starting Teacher Tools* on page 23.

   Teacher Tools appears.

2. In the *Reports* area, click **Class Performance**.

   NOTE

   If you want to generate a report comparing class performance, select **Class Comparison**.

   The *Class Performance* window appears.

3. Select the type of report you want from the *Choose a report type* list.
4. Select a class or **All classes** from the *Classes* drop-down list.
5. If you want to include specific assessments in your report, click **Change**, and then select the assessments.
6. If the *Educational standards* or *Cognitive levels* headings appear, click **Change**, and then select the options you want to include.
7. If you want to specify a performance range for your report, enter the percentage range in the *Performance threshold* area.
8. If the *Show* heading appears, select the type of chart you want to display.
9. Select one of the following options:

Option	Result
Preview	A *Preview* window appears showing the report.
Save Report	After prompting you to name the report, Teacher Tools saves the report so that you can view or process it later.
Create PDF	Saves the report as a .pdf file to your desired folder.

Printing and exporting questions and results

Using SMART Notebook software's *Response* menu, you can create hard copies of questions, handouts and student results. You can also export questions and student results to an Excel spreadsheet, a comma separated values (CSV) file or an HTML web page.

Printing from SMART Notebook software's Response menu

You can print a variety of information from the *Response* menu in SMART Notebook software. You can create and include header, footer and date information, and select a page range to print.

Print option	Description
Thumbnails	On one page, print up to six full-color, reduced images of SMART Notebook pages. You can include page numbers, image borders and page titles.
Handouts	On one page, print up to three full-color, reduced images of SMART Notebook pages, with ruled lines for notes. You can include page numbers, image borders and page titles.
Full page	On one page, print a full-color image of a SMART Notebook question page. You can include page numbers.
Questions	Print several questions on a page. If the question page doesn't have any objects or images, only the text appears. If there are objects on the question page, a full-color thumbnail of the question appears. You can include page numbers.
Results	**NOTE** This option is available only after you stop your assessment. Print several questions on a page. If the question page doesn't have any objects or images, only the text appears on the page. If there are objects on the question page, a full-color thumbnail of the question appears. In the *Print Preview* view, you can click the question to toggle from thumbnail to text-only format. The correct answer and the student's response appear beside each question, and the total score appears at the top of the first page. You can include page numbers. You can print a summary of the results for all students in the class list or for selected students.

To print questions or results

Select **Response > Print**, and then select the print option you want.

OR

For other options, select **Response > Print > More Print Options** to open SMART Response software's print window.

NOTE

The *Questions and Results* print options are available only if the SMART Notebook file includes SMART Response questions and saved results information. If the assessment is still running, or if it stops before any student answers a question, no results are saved.

Exporting results

If you save your SMART Notebook file after you ask questions, or after you run an assessment, you can open the SMART Notebook file at any time to view the results.

You can export the results to an Excel spreadsheet (Windows only), to an HTML page for viewing on a web browser or to a comma separated values (CSV) file that you can import into many spreadsheet and database applications. See *File formatting* on page 103. You can also export the results to a third-party gradebook in one of the predefined formats, or you can create a custom format.

NOTE

You can export results only after you stop the assessment. If you clear the results after you stop, the results are permanently deleted and you're unable to print or export them. After you save and close the SMART Notebook file, you can open the file and print or export the results.

To export results from Teacher Tools

1. Start **Teacher Tools**. See *Starting Teacher Tools* on page 23.

   Teacher Tools appears.

2. Select **File > Export** from the menu bar.

   The *Export* dialog box appears.

3. In the list, select the class with the results you want to export, and then click **Next**.

4. Select one of the following options:
   - Select the **By student** option if you want to export results for your entire class (the default selection) or for an individual student. If you want to export results for an individual student, also select the student's name from the drop-down list.
   - Select the **By assessment** option if you want to export the results of a class assessment or all assessments the class has taken.
   - Select the **To another gradebook format** option if you want to export the results to a third-party gradebook.

     NOTE

     If you select the CSV file format, you can customize the format to be compatible with your third-party gradebook. SMART Response software saves the customized format so that you don't have to customize the format each time you export the results.
5. Click **Next**.
6. Select the format you want to export the results in, and then click **Next**.

   The *Save As* dialog box appears.
7. Browse to a folder, type a name for the file, and then click **Save**.

   The results export and open in your computer's default file viewer.

To export results from SMART Notebook software

1. Stop the assessment if it's running.

   IMPORTANT

   Do not clear the results.
2. In SMART Notebook software, select one of the following options:
   - **Response > Export results to > Microsoft Excel**.

     NOTE

     Exporting to Excel isn't available on Mac computers.
   - **Response > Export results to > Web Page (HTML)**.
   - **Response > Export results to > Comma Separated Values (CSV)**.
3. Browse to a folder, type a name for the file, and then click **Save**.

   Either Excel or your default web browser opens showing the exported file.

Exporting questions

You can export your assessment questions in Accessible Portable Item Protocol (APIP) file format. The APIP file format uses standardized XML and makes it easier to transfer content.

To export questions in APIP file format

1. Stop the assessment if it's running.
2. In SMART Notebook software, select **Response > Export Questions To > APIP**.
3. Browse to a folder, type a name for the .zip file, and then click **Save**.

Chapter 7

Maintaining your SMART Response system

Preventing component damage 118
- Cleaning the receiver and clickers 118
- Transporting SMART Response hardware 118

Changing the clicker batteries 119
Resetting clickers 120
Receiver indicator lights 120
Troubleshooting the receiver 121
- Resetting the receiver 121
- Interpreting the receiver indicator lights 121

Other troubleshooting tips 122
Troubleshooting SMART Response CE connection issues 122
- Importing student responses 123
  - Finalizing disconnected students' results in Teacher Tools 123

Preventing component damage

CAUTION

- Do not use sharp or pointed objects, such as ballpoint pens or pointers, to press the clicker buttons.
- Do not use abrasive erasers or harsh chemicals to clean the receiver or clickers.
- Avoid setting up and using your system in an area with excessive levels of dust, humidity or smoke.

Cleaning the receiver and clickers

With proper care, your SMART Response hardware will provide years of trouble-free performance. Follow these cleaning tips to maintain your SMART Response system:

- Remove dust with a damp cloth before you use a cleaner.
- Clean the unit's surface with a household glass cleaner, such as Windex®, daily, weekly or as required.
- Do not spray cleaner directly onto the clicker. Instead, spray a small amount of cleaner on a cloth and then gently wipe the clicker.

Transporting SMART Response hardware

If you need to ship your SMART Response hardware, repack it with as much of the original packaging as possible. If you prefer to use your own packaging materials, make sure you adequately protect the product.

Changing the clicker batteries

Under normal operating conditions, the clicker batteries can operate for up to 200 days. When you replace them, use fresh batteries of the same type and quality, and change all of them at the same time.

IMPORTANT

If you are not using your clickers for an extended period or if the clicker batteries are exhausted, remove the batteries from your clickers. Damage caused by leaking batteries is not covered under the product warranty.

CAUTION

- Do not install batteries with the polarity (+/-) reversed.
- Do not attempt to recharge the batteries.
- Do not dispose of batteries in a fire or incinerator.
- Dispose of batteries according to your region's laws and regulations. If you don't know the applicable rules for your region, consult your battery manufacturer.

To change the clicker batteries

1. If the clicker is on, turn it off.
2. Using the included Phillips screwdriver, remove the screw from the back of the clicker, and then remove the cover.
3. Remove all of the exhausted batteries and dispose of them according to local regulations.
4. Insert fresh batteries.
5. Replace the cover and screw.

Resetting clickers

If a clicker isn't operating as expected, you might need to reset it. Perform the following steps to reset your clicker.

To reset a clicker

1. If the clicker is on, turn it off.
2. Using the included Phillips screwdriver, remove the screw from the back of the clicker, and then remove the cover.
3. Remove the batteries.
4. Press and hold the **Power** button for at least five seconds.
5. Replace the batteries.
6. Replace the cover and screw.

Receiver indicator lights

Receivers have the following indicator lights:

- Ready light
- Transmit light
- Receive light

The Ready light in the corner of the receiver indicates the operational state of the receiver module. The Transmit and Receive lights flash green to indicate transmit and receive activity between the receiver and the clickers.

The following table shows the Ready light's normal states. If the light's behavior doesn't match a state listed here, refer to *Troubleshooting the receiver* on the next page.

Ready light state	Description
Off	The receiver is disconnected from the computer.
Solid red	The receiver has power, but either it isn't communicating with the computer or no class is started.
Solid green	The receiver is receiving power and communicating successfully with SMART Response software.

Troubleshooting the receiver

CAUTION

Do not open the receiver or the clicker units to attempt repairs. Refer all service inquiries to authorized SMART service personnel.

Resetting the receiver

If your SMART Response system behaves erratically (possibly because of a static discharge or power fade), you might be able to restore normal operation by resetting the receiver.

Reset the receiver completely by disconnecting and then reconnecting the USB cable.

Interpreting the receiver indicator lights

If you experience a problem with your receiver, you can use its indicator lights to troubleshoot it.

Ready light	Transmit light	Receive light	Receiver state
Red, green, yellow	Green	Green	The receiver is starting up. Lights flash in sequence.
Flashing green	Off	Off	The receiver is scanning radio channels.
Flashing green	Any state	Any state	The receiver is accepting commands from the computer.
Green	Constant flashing	Flashes when it receives data from a clicker	Receiver has power and is communicating with the computer, but it isn't receiving commands.
Yellow	Off	Off	The receiver has power, but communication circuits have failed.
Flashing red	Flashing	Flashing	Manufacturing tests are running, and the receiver isn't operational. All lights flash together.
Flashing yellow	Any state	Any state	The receiver software checksum failed.
Flashing yellow	Flashing	Flashing	The receiver has a software failure.

Other troubleshooting tips

Symptom/observation	Action/remedy
When you export SMART Response question set results from a SMART Notebook file using the CSV command, fractions change to dates.	In your exported results, change the exported dates to fractions, add a space before each fraction and convert the month to its numerical value. The converted month is the fraction's numerator, and the day is the denominator.
Your computer doesn't recognize SMART Response software, and the receiver's Status LED light remains solid red.	Remove the SMART Response hardware drivers on your computer, and then reconnect the receiver following the instructions in *The SMART Response System Receiver Doesn't Work* (smarttech.com/kb/115401).
The receiver's Status LED flashes red when SMART Response software is in CE or VE mode.	This is normal. When SMART Response software is in a mode that doesn't require a receiver, the software doesn't start the hardware drivers.
Responses from students don't appear in SMART Notebook reports.	Wait at least 10 seconds after the last student responds before you stop a question set.
Additional SMART Response receivers don't connect to the network when you install more than one receiver on your computer.	Disconnect the additional receiver's USB plug to resume normal operation. Disconnect and reconnect the first receiver's USB plug if it doesn't work, or if the Status light turns red. **NOTE** Installing more than one receiver increases the number of clickers you can use in your classroom, but it affects your computer's performance and doesn't increase your reception.

Troubleshooting SMART Response CE connection issues

If students using SMART Notebook SE software are disconnected during an assessment, they can still complete the assessment offline and save their responses to a USB storage device from which you can import their answers. See *Importing student responses* on the next page.

If your students are disconnected from your class and aren't able to reconnect, try the following tips.

- Ensure that the student's network cable is properly connected to the student's device. If it's connected, disconnect it, and then reconnect it.
- Ensure that your own network cable is properly connected to your computer. If it's connected, disconnect it, and then reconnect it.

- Use the Windows network connection repair utility. See your operating system's Help system for more information.
- If your students can't see your class in SMART Notebook SE software, try connecting them manually. See *Manually connecting to a class* on page 75.
- Contact your system administrator for help.

Importing student responses

If students are disconnected during an assessment, automatically attempts to reconnect to the class. If the software is unable to reconnect, students can still complete their assessments offline and save their responses to a USB drive from which you can import their answers. Disconnected students will be prompted to save their responses after they click **Finish** in SMART Notebook SE software.

To import student responses

1. Start **Teacher Tools**. See *Starting Teacher Tools* on page 23.

   Teacher Tools appears.

2. Connect the student's USB drive to your computer.
3. Select **Import > Student Responses** from the toolbar.

   The *Select Unsent SMART Response Files* dialog box appears.

4. Browse to and select the unsent response (.unsent) file, and then click **Open**.

   The *Import* dialog box appears and displays a progress bar.

5. When the import is complete, click **OK**.

Finalizing disconnected students' results in Teacher Tools

If students are disconnected from your class during an assessment before they submit their responses, a **Disconnected Students** icon appears beside their names in the *Assessments* tab, indicating that their marks aren't final. If you import a disconnected student's responses or edit a disconnected student's mark, the **Disconnected Students** icon disappears.

If you want to manually clear the icon and set the marks as final, follow the instructions below.

To set a disconnected student's mark as final

1. Start **Teacher Tools**. See *Starting Teacher Tools* on page 23.

   Teacher Tools appears.

2. Select the class the student belongs to in the *Gradebook* class list.

   The class information appears.

3. Click the **Students** tab.

4. Select the student's name in the list.

   The student's information appears in the lower pane.

5. Click the **Results** tab.

6. Select the row of the student whose mark you want to set as final, and then click the **Clear flag** icon.

   The icon disappears.

Appendix A

Hardware environmental compliance

SMART Technologies supports global efforts to ensure that electronic equipment is manufactured, sold and disposed of in a safe and environmentally friendly manner.

Waste Electrical and Electronic Equipment Regulations (WEEE directive)

Waste Electrical and Electronic Equipment regulations apply to all electrical and electronic equipment sold within the European Union.

When you dispose of any electrical or electronic equipment, including SMART Technologies products, we strongly encourage you to properly recycle the electronic product when it has reached end of its life. If you require further information, please contact your reseller or SMART Technologies for information on which recycling agency to contact.

Restriction of Certain Hazardous Substances (RoHS directive)

This product meets the requirements of the European Union's Restriction of Certain Hazardous Substances (RoHS) Directive 2002/95/EC.

Consequently, this product also complies with other regulations that have arisen in various geographical areas, and that reference the European Union's RoHS directive.

Batteries

Remote contains CR2025 battery. Recycle or dispose of batteries properly.

Perchlorate material

Contains perchlorate material. Special handling may apply. See dtsc.ca.gov/hazardouswaste/perchlorate.

Packaging

Many countries have regulations restricting the use of certain heavy metals in product packaging. The packaging used by SMART Technologies to ship products complies with applicable packaging laws.

Covered electronic devices

Many U.S. states classify monitors as covered electronic devices and regulate their disposal. Applicable SMART Technologies products meet the requirements of the covered electronic devices regulations.

California Air Resources Board – Airborne Toxic Control Measure

California has enacted a law to restrict the emissions of formaldehyde from composite wood products. The SMART Technologies products that contain composite wood products are compliant to this regulation.

Restriction of Certain Chemicals (REACH directive)

The European Union has enacted the EU REACH Directive which restricts the use of certain chemicals in products. SMART Technologies is committed to complying with this initiative.

Index

A

activation 14-15
airborne toxic controls 126
Anonymous mode
  about 67
  connecting SMART Response clickers in 71, 73
  starting a class in 68
answer keys 50
assessment results
  flagging 106
  formatting 102
  importing 102
  reviewing 103
  types of
    Class Performance reports 109
    Student Performance reports 107
assessments
  adding choices to questions for 63
  adding content pages to 43
  adding questions to 45
  collecting questions 83
  creating 41
  creating answer keys for 50
  defining feedback options 43
  importing questions into 54-55, 57-58, 60
  previewing results 85
  reviewing results 83
  setting answers for 63
  starting 79

B

batteries 119, 125

C

California Air Resource Board 126
Class List Server class lists 34
class lists
  adding students to 35
  creating 28
  editing student information in 35
  removing students from 36
  tagging students in 37
classes
  changing passing grade for 37
  connecting to 71
  disconnecting students from 77
  generating performance reports for 109
  starting in Anonymous mode 68
  starting in Sign In mode 69
clickers See SMART Response clickers
compliance ii
computer requirements 9
covered electronic devices 126
CSV files 32-33

D

Diffie-Hellman encryption 26
DOC and DOCX files 54-56

E

encryption methods 26
environmental requirements 8
European Union regulations 125-126
exams See assessments
ExamView
  about 61

exporting to 62
importing from 60
Excel 29
exports
ExamView 62
questions 115
results 113

F

flags, student result 106

H

HTML files 60-62

I

important information i
imports 29, 32, 54-55, 57-58, 60-61, 102, 123
Insert Question wizard 51
instant questions 21
intelligent expression grading 47
IP addresses 75

L

languages
LE clicker 97
PE clicker 89
LE clickers See SMART Response clickers
Likert scale 46
locking, SMART Response sign-in 76

M

multiple answer questions 46, 91
multiple choice questions 46, 90
multiple SMART Response devices 18

N

number, fraction or decimal questions 46, 91
number, fraction or expression questions 47

P

packaging 126
pairing, SMART Response clicker and receiver 20
PDF files
importing 58-59
PE clickers See SMART Response clickers
Perchlorate material 125
port numbers 75
preferences
SMART Response in SMART Notebook 40
printers 112
privacy and alert options 25

Q

QR code 82
questions
from students to teachers 99
from teachers to students 45
quizzes See assessments

R

REACH directives 126
receiver See SMART Response receiver
remotes See SMART Response clickers
reporting
Class Performance 109
Student Performance 107
RoHS directive 125

S

safety information i, 66

service ports 27
Setup Tool 16
Sign In mode
about 67
starting a class 69
SMART Notebook 40
SMART Notebook SE 26-27, 123
SMART Response clickers
about 4
assigning IDs to 20
changing batteries of 119
changing language of LE clicker 97
changing language of PEclicker 89
changing settings for 89
checking the status of 13
cleaning 118
disconnecting 77
monitoring 70
pairing with a receiver 20
resetting 120
selecting 16
transporting 118
types of
LE 95
PE 88
XE 98
SMART Response receiver
about 4
checking the status of 13
cleaning 118
connecting 10
extending the USB cable of 12
indicator lights 120
pairing with clickers 20
resetting 121
transporting 118
troubleshooting 121
SMART Response system
about 1, 6
activating 14-15
features of 2
getting started with 5
maintaining 117
starting the first time 19
using multiple devices 16, 18
SMART Response VE
Advanced Settings 18
for Internet-enabled devices 16
Local server 18
SMART Sync 34, 57
SMART Teacher file
creating 23
editing 24
SQZ files 57
SSL encryption 26
students
adding to class lists 35
disconnecting from classes 77-78
editing information for 35
importing response from 123
removing from class lists 36
tagging 37

T

tags
adding to questions 64
adding to students 37
Teacher mode menu 96
Teacher Tools 22
tests See assessments
text answer questions 46, 93
true/false questions 45, 90

U

U.S. regulations 126
USB cables, extending 12

W

WEEE directive 125
Word 54-56
word cloud 85

X

XE clickers See SMART Response clickers
XLS and XLSX files 29
XML files 57

Y

yes/no questions 45, 89

SMART Technologies
smarttech.com/support
smarttech.com/contactsupport
smarttech.com/kb/170651